Version: V1.00.000

Revised date: 10-26-2021

SMARTSAFE owns the complete intellectual property rights for the software used by this product. For any reverse engineering or cracking actions against the software, SMARTSAFE will block the use of this product and reserve the right to pursue their legal liabilities.

Copyright Information

Copyright © 2020 by SHENZHEN SMARTSAFE TECH CO.,LTD. All rights reserved. No part of this publication may be reproduced, stored in a retrieval system, or transmitted in any form or by any means, electronic, mechanical, photocopying, recording or otherwise, without the prior written permission of SMARTSAFE.

Neither SMARTSAFE nor its affiliates shall be liable to the purchaser of this unit or third parties for damages, losses, costs, or expenses incurred by purchaser or third parties as a result of: Accident, misuse, or abuse of this unit, or unauthorized modifications, repairs, or alterations to this unit, or failure to strictly comply with SMARTSAFE operating and maintenance instructions. SMARTSAFE shall not be liable for any damages or problems arising from the use of any options or any consumable products other than those designated as Original SMARTSAFE Products or SMARTSAFE Approved Products by SMARTSAFE.

All information, specifications and illustrations in this manual are based on the latest information available at the time of printing. SMARTSAFE reserves the right to make changes at any time without prior written or oral notice.

Trademark Information

SMARTSAFE is a registered trademark of SHENZHEN SMARTSAFE TECH CO.,LTD. in China and other countries. All other SMARTSAFE trademarks, service marks, domain names, logos, and company names referred to in this manual are either trademarks, registered trademarks, service marks, domain names, logos, company names of or are otherwise the property of SMARTSAFE or its affiliates. In countries where any of the SMARTSAFE trademarks, service marks, domain names, logos and company names are not registered, SMARTSAFE claims other rights associated with unregistered trademarks, service marks, domain names, logos, and company names. Other products or company names referred to in this manual may be trademarks of their respective owners. You may not use any trademark, service mark, domain name, logo, or company name of SMARTSAFE or any third party without permission from the owner of the applicable trademark, service mark, domain name, logo, or company name. You may contact SMARTSAFE by visiting the website at www.newsmartsafe.com, or writing to SHENZHEN SMARTSAFE TECH CO.,LTD., 3F, Building B, Qiao'an Technology Industrial Park, Guanlan, Longhua New District, Shenzhen, to request written permission to use Materials on this manual for purposes or for all other questions relating to this manual.

Safety Precautions

The iSmartADAS Mobile calibration tool is exclusively intended for use on a vehicle. To avoid personal injury, property damage, or accidental damage to the product, read all of the information in this section before using the product:

- To operate the iSmartADAS Mobile calibration tool properly, user must have knowledge of automotive technology and is therefore aware of the sources of danger and risks in the repair shop and on vehicles.
- All notes given in the individual sections of the operating instructions apply. In principle it is required to follow the steps and safety precautions stated below.
- Furthermore, pay attention to all general instructions from labor inspectorates, trade associations and vehicle manufacturers as well as all laws, legal ordinances and instructions which have to be commonly obeyed by a repair shop.

The safety messages herein cover situations SMARTSAFE is aware of. SMARTSAFE cannot know, evaluate or advise you as to all of the possible hazards. You must be certain that any conditions or service procedure encountered do not jeopardize your personal safety.

WARNING SYMBOLS AND DEFINITIONS	
⚠	This safety alert symbol is used to alert you to potential injury hazards. Obey all safety messages that follow this symbol to avoid possible injury.
DANGER	Indicates an imminently hazardous situation which, if not avoided, could result in death or serious injury to the operator or to bystanders.
WARNING	Indicates a potentially hazardous situation which, if not avoided, could result in death or serious injury to the operator or to bystanders.
CAUTION	Indicates a hazardous situation which, if not avoided, could result in minor or moderate injury to the operator or to bystanders.
	Addresses practices not related to personal injury.

DANGER

When an engine is operating, keep the service area well-ventilated or attach a building exhaust removal system to the engine exhaust system. Engines produce various poisonous compounds (hydrocarbon, carbon monoxide, nitrogen oxides, etc.) that cause slower reaction time and result in death or serious personal injury.

DANGER

- Do not use a damaged battery charger.
- The built-in Lithium battery is factory replaceable only. Incorrect replacement or tampering with the battery pack may cause a explosion.

WARNING

Read all safety warnings and instructions.

*Note: Failure to follow the warnings and instructions may result in electric shock, fire and/or serious injury.

1. Always perform automotive testing in a safe environment.
2. Do not connect or disconnect any test equipment while the ignition is on or the engine is running.
3. **DO NOT attempt to operate the tool while driving the vehicle. Have second personal operate the tool. Any distraction may cause an accident.**
4. Before starting the engine, put the gear lever in the Neutral position (for manual transmission) or in the

Park (for automatic transmission) position to avoid injury.

5. NEVER smoke or allow a spark or flame in vicinity of battery or engine. Do not operate the tool in explosive atmospheres, such as in the presence of flammable liquids, gases, or heavy dust.
6. Keep a fire extinguisher suitable for gasoline/chemical/electrical fires nearby.
7. Wear an ANSI-approved eye shield when testing or repairing vehicles.
8. Put blocks in front of the drive wheels and never leave the vehicle unattended while testing.
9. Use extreme caution when working around the ignition coil, distributor cap, ignition wires and spark plugs. These components create hazardous voltage when the engine is running.
10. To avoid damaging the tool or generating false data, please make sure the vehicle battery is fully charged and the connection to the vehicle DLC (Data Link Connector) is clear and secure.

On Using iSmartADAS Mobile Calibration Tool

In order to avoid incorrect handling and injury to the user or destruction of the iSmartADAS Mobile calibration tool arising from this, pay attention to the following:

- Only assemble the iSmartADAS Mobile calibration tool according to the operating instructions.
- Protect the iSmartADAS Mobile calibration tool from water and strong impacts.
- Protect the iSmartADAS Mobile calibration tool from long periods of exposure to solar radiation.
- The light source should ensure that there is no reflected spot on the calibration panel.
- In the field of view of the camera, there should be no direct light source into the camera, otherwise the camera will reduce the exposure so that the captured calibration pattern becomes darker, adversely affecting the calibration.
- The light source should ensure uniform illumination distribution in the calibration workstation.
- Do a regular check and service for the iSmartADAS Mobile calibration tool.

On Using Vehicle

When working on the vehicle, please carefully read the following information:

- Make sure the vehicle is parked with all wheels on an even floor surface.
- The park position should also be engaged in automatic vehicles.
- Before calibrating, make sure the vehicle system is working properly and no trouble codes are stored in ECU memories.
- After a calibration is completely performed, remember to unplug the VCI device from the vehicle's diagnostic socket.

On Using Laser Devices

- The laser radiation can cause serious eye injury.
- Do not stare into the laser beam.
- Never look directly into the laser beam because it may cause damage to / destruction of the retina.
- Do not position the laser beam so that it unintentionally blinds you or others.
- Do not operate the laser level near children or let children operate the laser level.
- Do not look into a laser beam using magnifying optical devices such as binoculars or a telescope, as this will increase the level of eye injury.
- Do not remove or deface warning labels on the laser device.
- Do not disassemble the laser level, laser radiation can cause serious eye injury.
- Do not operate the laser in explosive atmospheres such as flammable liquids, gases or dust. Sparks from

the tool can cause ignition.

- Do not use solvents to clean the laser unit.
- Do not drop the unit.
- Remove the batteries if the laser / laser range finder will not be in use for a long period.
- Do not allow children to use the laser device as a toy.
- While installing a laser module, please make sure it is firmly and securely attached.

The included goggles are intended to enhance the visibility of the Laser beam. They will not protect your eyes against laser radiation.

Table of Contents

1 Product Profile 1
1.1 About ADAS 1
1.2 About iSmartADAS Mobile 1
1.2.1 Product Introduction 1
1.2.2 Packing List 3
1.3 Components & Controls 9
1.3.1 Calibration frame 9
1.3.2 Five-line laser device (LAM09-01) 12
1.3.3 Cross laser module (LAM09-02) 15
1.3.4 Laser reflector (LAM09-03) 15
1.3.5 Auxiliary laser mirror (LAM09-04) 16
1.3.6 L-shaped positioning bracket (LAM09-05) 16
1.3.7 Plumb line (LAM09-06) 16
1.3.8 Target board storage bracket (LAM09-07) 16
1.3.9 Target extension rod for Toyota (LAM09-08) 17
1.3.10 Target extension rod for Honda (LAM09-09) 17
1.3.11 Laser range finder 18
2 Initial Use 20
2.1 Place the calibration frame 20
2.2 Activate ADAS function 22
2.3 General Calibration Operations for LDW System 24
2.3.1 Precondition for the Use of the iSmartADAS Mobile 24
2.3.2 Calibration Operation 26
3 Start Calibration 35
3.1 Calibrating the front camera 35
3.1.1 Why to calibrate? 35
3.1.2 Operation Notes 35
3.1.3 Start calibration 37
3.2 Calibrating the rear camera 46
3.2.1 Why to calibrate? 46
3.2.2 Operation Notes 47
3.2.3 Start calibration 48
4 Target Pattern Kit (Optional) 54
5 Care & Maintenance 57
6 Warranty 57

1 Product Profile

1.1 About ADAS

Advanced Driver Assistance Systems (ADAS) are electronic components in vehicles, which include a wide range of safety features for vehicles such as autonomous emergency braking (AEB), lane departure warning (LDW), lane keep assist, blind spot elimination, night vision cameras and adaptive lighting.

Most road accidents occurred due to the human error. Advanced Driver Assist Systems are developed to automate, adapt and enhance vehicle systems for safety and better driving. The automated system provided by ADAS to the vehicle is proven to reduce road fatalities, by offering technologies that alert the driver to potential problems or by implementing safeguards and taking over control of the vehicle.

Initially only found on premium segment, the number of modern mid-class and compact vehicles equipped with Advanced Driver Assist Systems is growing at a rapid rate.

The cameras and sensors used by these systems have to be precisely calibrated and adjusted. Incorrect calibration resulting from windscreen replacement or wheel alignment can cause the system to deliver incorrect results or even fail completely, resulting in a serious accident or even a fatality.

1.2 About iSmartADAS Mobile

1.2.1 Product Introduction

As a flexible and portable ADAS calibration tool, the iSmartADAS Mobile enables you to effectively and accurately calibrate a wide range of camera-based driving assistance systems, e.g. the front camera for the lane departure warning system. Repair and service shops do not require a fully equipped wheel alignment station or a leveled workshop ground or platform lift in order to work with iSmartADAS Mobile calibration tool.

It features the following key functions and advantages:

- Convenient to carry designed with the foldable base and crossbars, supporting outdoor calibration.
- Five-line & cross laser instrument available for precise centering positioning.
- Simple to fold/unfold and easy to operate.
- Manual rocker for adjusting the height freely.
- Dedicated storage bracket for storing small target boards and big pattern boards.
- Covering a wide range of car makes.
- Excellent user experience for providing vehicle-specific, step-by-step instructions and detailed illustrations.

To perform the ADAS calibration, the following two components are required:

- iSmartADAS Mobile Calibration Tool – It is designed to calibrate the position of the vehicle sensor and target. It mainly consists of calibration frame (with cross member), five-line laser device, cross laser module, laser reflector, auxiliary mirror, L-shaped positioning bracket, leader hammer and calibration panel (available in packages or individual) etc.

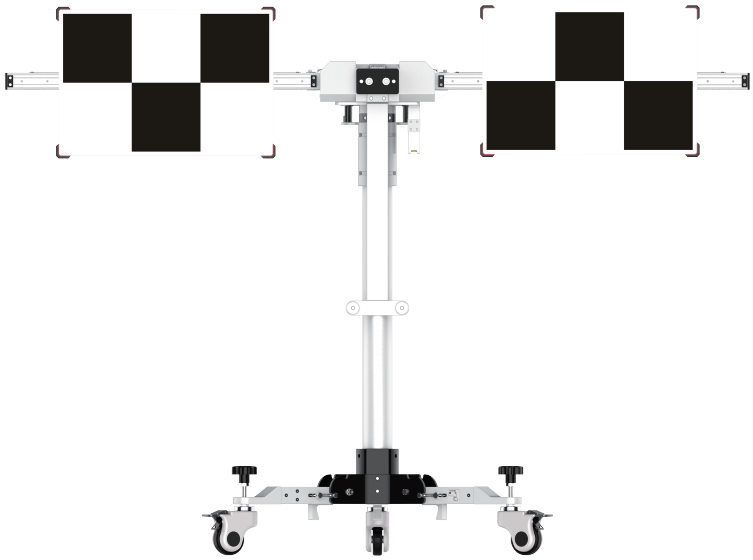

· Diagnostic Tool (sold separately) – The calibration tool can be exclusively operated in conjunction with a SmartSafe's diagnostic tool. Diagnostic tools from other manufacturers will not be supported.

Currently, the following diagnostic tools made by SmartSafe can work together with the calibration tool (More new products featuring this module will come soon in the future without prior notice):

- iSmartLink

1.2.2 Packing List

Please check the packing list upon receiving your tool so that complaints can be issued immediately regarding potential damage or missing parts. For different destinations, the accessories may vary. For details, please consult from the local dealers or check the included packing list.

While unloading, please note: The heavy tool may drop down and cause injuries, remember to always unload the tool with the aid of a second person or use suitable aid as necessary.

Items	Picture	Quantity
Calibration frame		1
Five-line laser device (LAM09-01)		1
Cross laser module (LAM09-02)	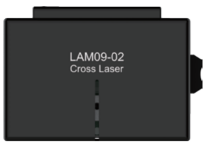	1
Laser reflector (LAM09-03)		1
Auxiliary mirror (LAM09-04)		1
L-shaped positioning bracket (LAM09-05)		1

Plumb line (LAM09-06)		1
Target storage bracket (LAM09-07)		1
Target extension rod for Toyota (LAM09-08)		1
Target extension rod for Honda (LAM09-09)		1
Laser range finder		1
Cross sticker	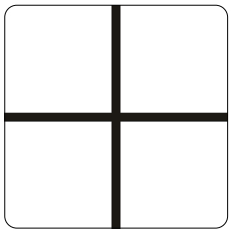	10

ADAS Activation Card	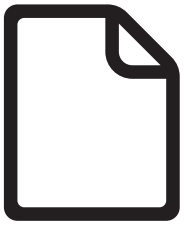	1
User Manual	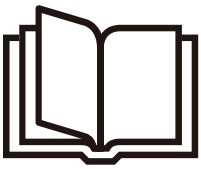	1
Calibration target / pattern boards	(Available in different product configuration packages. Target boards and patterns for Lane Departure Warning System are included with this tool. Other boards and patterns for other ADAS systems need to be purchased separately. For detailed packages, refer to Chapter Target Pattern Kit.)	
LAM01-01 **Benz-LDW**	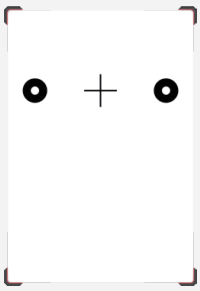	1
LAM01-02 **VW-LDW**	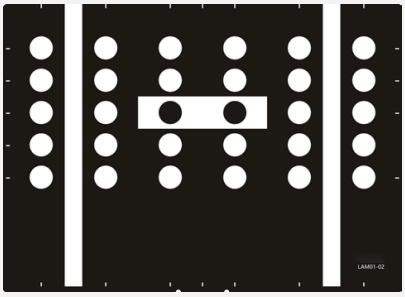	1
LAM01-04-L **Honda-LDW**	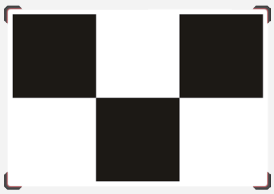	1

LAM01-04-R **Honda-LDW**	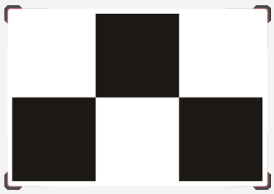	1
LAM01-06-1 **Toyota-LDW**	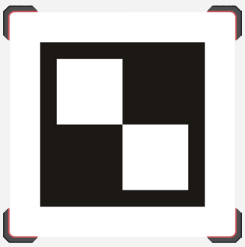	1
LAM01-06-2 **Toyota-LDW**	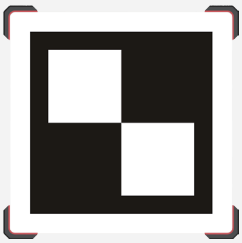	1
LAM01-06-3 **Toyota-LDW**	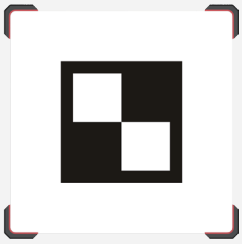	1
LAM01-07-L **Nissan-LDW**	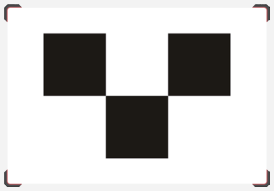	1
LAM01-07-R **Nissan-LDW**	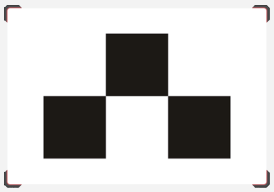	1
LAM01-09 **Hyundai/Kia-LDW**	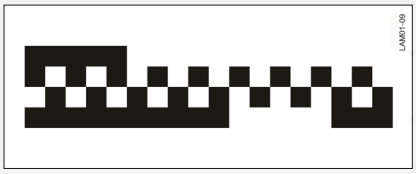	1
LAM01-10 **Mazda-LDW**	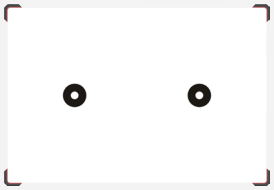	1

LAM01-11 **Romeo-LDW**	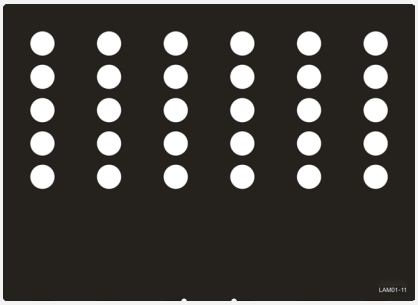	Optional
LAM01-12-L **Nissan/Renault-LDW**		1
LAM01-12-R **Nissan/Renault-LDW**		1
LAC01-13 **Hyundai-LDW**		1
LAM01-15 **Subaru-LDW**		1
LAM01-16-L **Mazda-LDW**		1
LAM01-16-R **Mazda-LDW**		1

LAM01-17 **Honda-LDW**		1
LAM01-18-L **Suzuki-LDW**	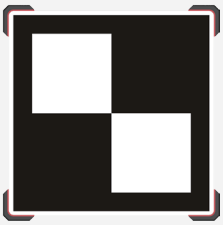	1
LAM01-18-R **Suzuki-LDW**	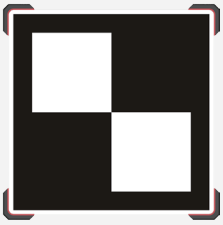	1
LAM01-19-L **Mitsubishi -LDW**	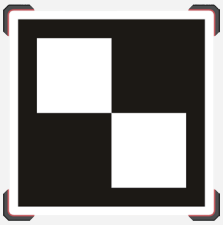	1
LAM01-19-R **Mitsubishi-LDW**	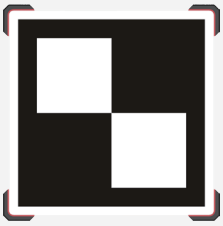	1
LAM01-20 **Honda-LDW**		1

1.3 Components & Controls

The iSmartADAS Mobile calibration tool mainly includes the following items and components:

1.3.1 Calibration frame

The calibration frame mainly consists of the following components:

A - Right crossbar

Loaded with a scale ruler, a positioning plate for securing the target boards.

B - Positioning bracket for pattern boards

Loaded with a level gauge, two safety snap hooks for locking the crossbars and a fix-holder for cross laser module.

C - Lifter

D - Gear box and hand crank

For adjusting the height of the lifter.

E - Laser range finder

F - Left crossbar (same as Right crossbar)

G - Base holder

H - Universal rolling casters

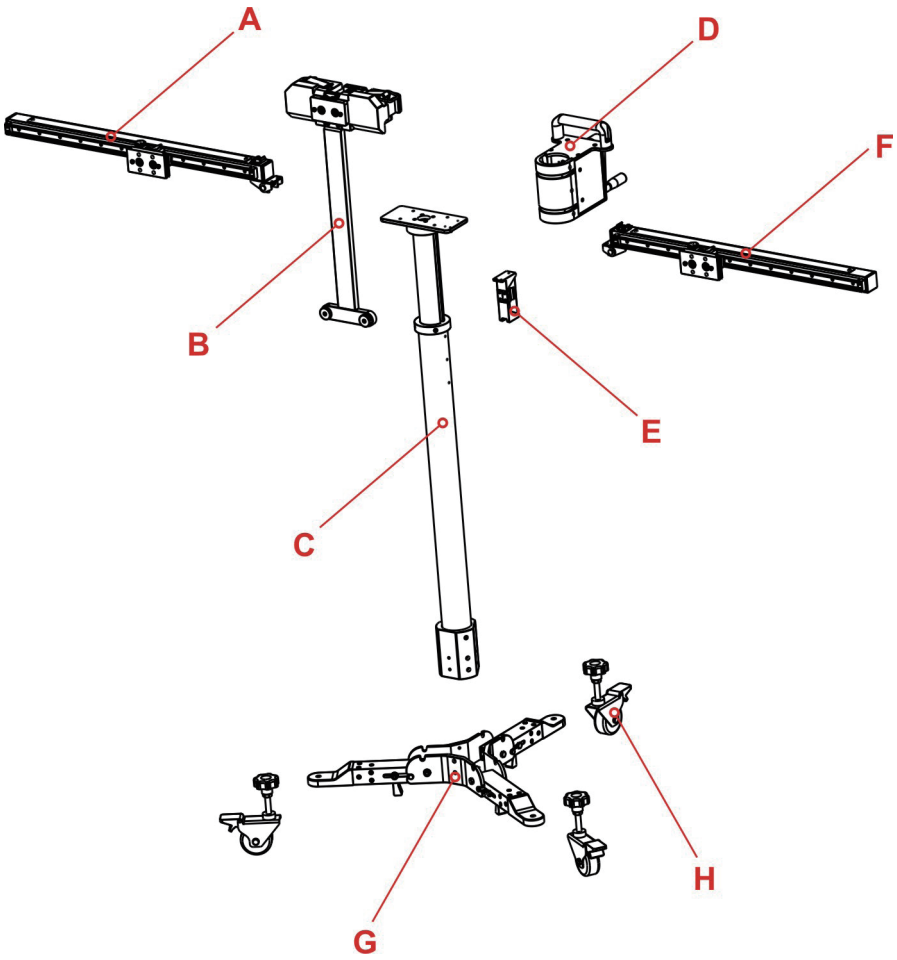

Front View

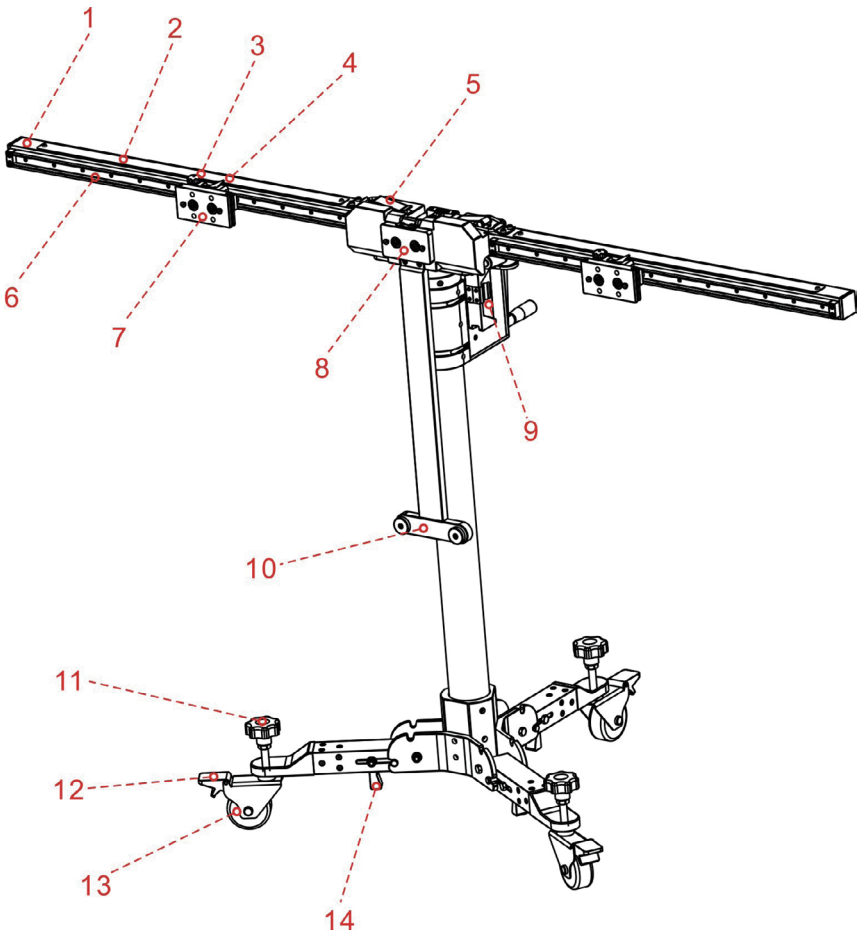

1. Right crossbar

2. Scale ruler*

3. Set screw*

For securing the positioning plate.

When released, the positioning plate (7) can be moved along the sliding rail freely.

⚠WARNING

When unfolding the right / left crossbar, please tighten the set screw to prevent the positioning plate (7) from sliding to cause personal injury.

4. Scale indicator*

5. Safety snap lock*

Locks / unlocks the crossbar. When unlocked, the crossbar can be folded for easy-to-carry.

6. Sliding rail for positioning plate*

7. Positioning plate*

For securing the target boards / target board extension rod.

There are two BIG holes and two SMALL holes available on the positioning plate. Before shipment, each BIG hole is pre-installed with one magnet for attaching the metal plate on the target board and each SMALL hole is preset with one hanging nail for securing the target board or the target board extension rod. When installing the target board or extension rod, align the mounting holes with the two small holes and attach it onto the hanging nails.

8. Positioning plate / Magnetic laser fix-plate

For securing the pattern boards / attaching the cross laser module. When installing the big pattern board, it should be lifted up to ensure a proper installation of the pattern board.

9. Laser range finder

For measuring the height of the center of the pattern board from the ground.

> A right tolerance is adjusted for the calibration height of every vehicle on the diagnostic tool. Keep the value displayed on the screen same as the value displayed on the diagnostic tool when performing calibration.

10. Pattern board holder

Supports the bottom of the pattern board.

11. Adjustment screw

Rotate it until the bubbles of the level gauge (16) on calibration frame are centered.

12. Parking safety mechanism

Step it down to lock the rolling caster (13) to prevent it from moving.

13. Universal rolling caster

14. Push-pull lever

Controls the folding/unfolding of the base holder.

> All items marked with * are same as those on the left crossbar.

Rear View

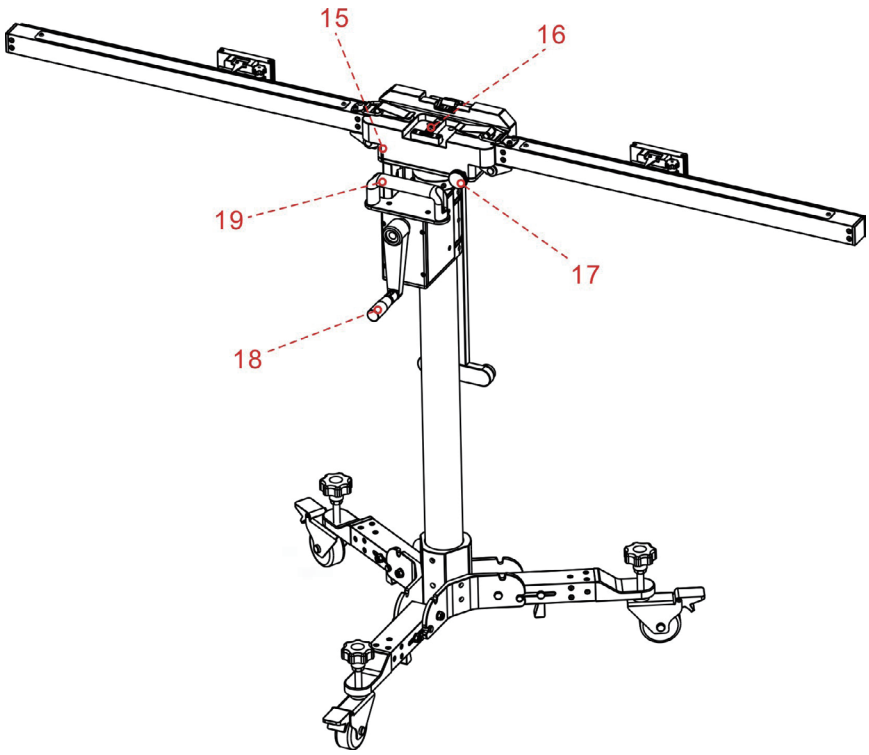

15. Marked red lines

The upper line should be aligned with the lower line when the calibration frame is completely unfolded. If these lines are not aligned, rotate the fine-tuning bolt (17) to adjust it.

16. Level gauge

For checking if the calibration frame is standing on an even surface.

17. Fine-tuning bolt

Rotate the bolt to turn the crossbar axially.

18. Hand crank

For adjusting the height of the lifter.

19. Handle

1.3.2 Five-line laser device (LAM09-01)

The five-line laser device is used for aiming laser beams in five directions to position the calibration frame and vehicle.

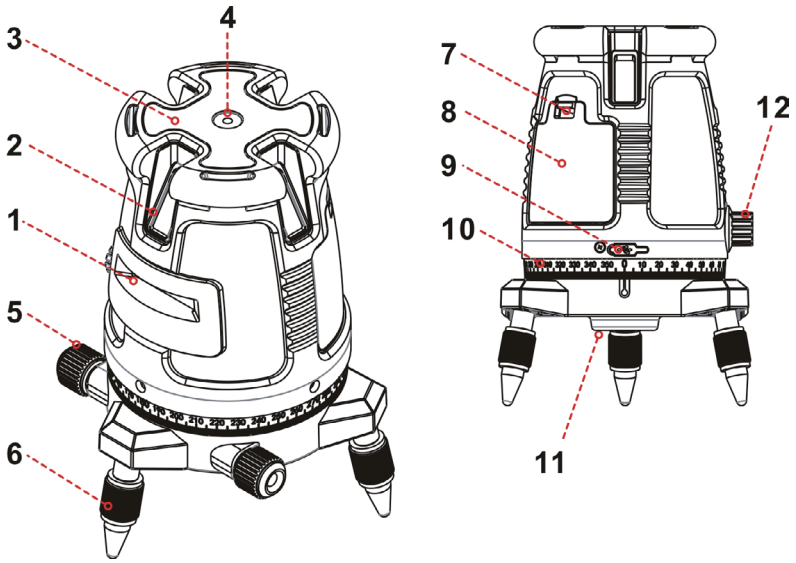

1. Horizontal laser output window
2. Vertical laser output window
3. Keypad*
4. Surface level
5. Fine adjustment knob
6. Adjustable support legs
7. Battery cover
8. Battery compartment
9. Charging port
10. Graduated scale
11. 5/8” Tripod threaded adaptor
12. Pendulum safety lock

***Keypad**

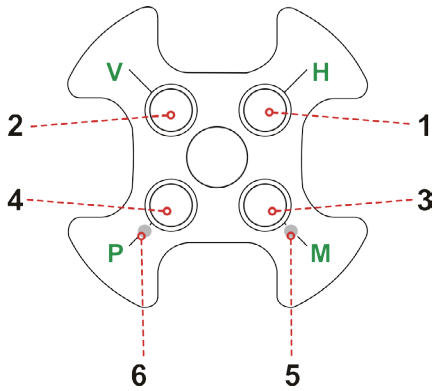

1. Horizontal line button
2. Vertical lines button
3. Manual mode button
4. Pulse mode button
5. Manual mode red LED indicator
6. Pulse mode green LED indicator

This tool can be operated either by designated lithium-ion battery pack, or 4 AA alkaline batteries.

Installation of the lithium-ion battery pack

1. Press down the latch of the cover and pull the battery cover.
2. Insert the lithium-ion battery pack with the contact terminal towards the 2 small pins in the battery compartment.
3. Reclose the battery cover.
4. Use a standard 5 V ± 5% charger (1A-2A), with micro USB connector to charge the Li-Polymer battery pack.
5. The rechargeable battery pack can be charged outside or inside the laser battery compartment.
6. Charge the battery pack at least 2 hours before using the laser tool for the first time.

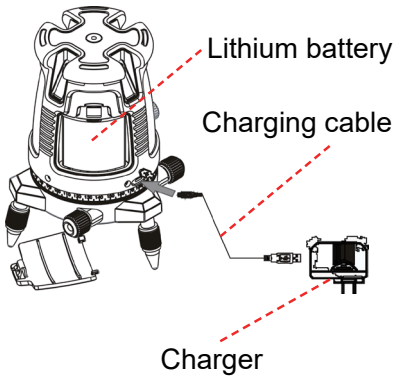

DANGER

- Do not use a damaged battery charger.
- The built-in Lithium battery is factory replaceable only. Incorrect replacement or tampering with the battery pack may cause a explosion.

Installation of the 4 AA Batteries

1. Press down the latch of the cover and pull the battery cover.
2. Insert 4 new AA batteries of the same brand, according to the polarity diagram indicated on the inside of the battery compartment.
3. Reclose the battery cover.

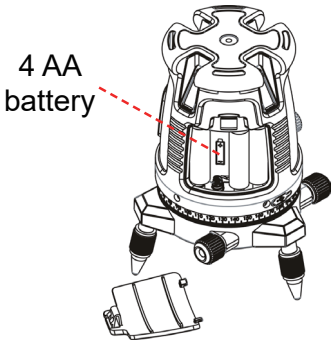

WARNING

Batteries can deteriorate, leak or explode, and can cause injury or fire.

1. Do not shorten the battery terminals.
2. Do not charge Alkaline batteries.
3. Do not mix old and new batteries.
4. Do not dispose of batteries into household waste.
5. Do not dispose batteries in fire.
6. Defective or dead batteries must be disposed according to local regulations.
7. Keep the batteries out of reach from children.

If the laser level will not be used for a long period, remove the batteries from the battery compartment. This will prevent batteries from leaking and corrosion damage.

Technical parameters:

Laser beams output pattern	• Horizontal and forward vertical cross beams • Horizontal, forward and backward vertical beams • Horizontal and 4 orthogonal vertical beams Plumb down dot appears while vertical beam is ON • Horizontal beam
Laser range	• Indoor - 30m (100ft) • Outdoor with detector 60m (200ft)
Accuracy **Accuracy (plumb Dot)**	±0.2mm/m (±0.0002in/in) ±1mm/1.2m
Fan angle	120°±5°
Self-leveling Range	±2.5°
Laser line width	2 mm±0.5mm/5m (0.10” ±0.02” at 20’)
Wavelength	520 ±10nm - Laser Class II
Power supply	Li-Polymer battery pack or 4 AA Alkaline batteries (not included)
Battery life	2.5 hours continuous operation with Li-Polymer 5 hours with 4AA Alkaline batteries
Operating temp.	-10° C + 45° C (14°F +113°F)
Storage temp.	-20° C +60° C (-4°F +140°F)
Water & dust proof	IP54
Dimensions	ø150mmx195mm (ø 6” x8”)
Weight without batteries	1250gr ±10gr (2.75lbs± 0.35±oz)

1.3.3 Cross laser module (LAM09-02)

While adjusting the calibration frame in parallel with the vehicle, the laser module can be used. Generally it should be attracted onto the magnetic laser fix-plate (8) of the calibration frame.

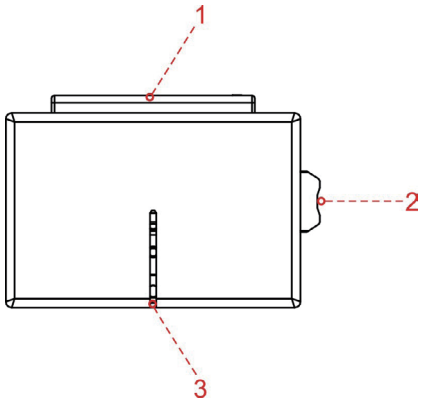

1. Battery cover

2. Switch

3. Laser gap

Installation of the 2 AAA Batteries

1. Open battery cover.
2. Insert 2 new AAA batteries of the same brand, according to the polarity diagram indicated on the inside of the battery compartment.
3. Reclose the battery cover.

1.3.4 Laser reflector (LAM09-03)

The laser reflector is used to position the center line by confirming front and rear center points of the vehicle are on the same line.

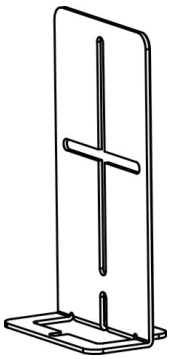

1.3.5 Auxiliary laser mirror (LAM09-04)

The auxiliary laser mirror is used to position the center line by ensuring the front and rear center points of the vehicle are on the same line.

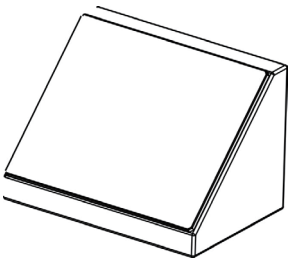

1.3.6 L-shaped positioning bracket (LAM09-05)

The L-shaped positioning bracket aids in locating the center of the front wheels to correctly position the calibration frame.

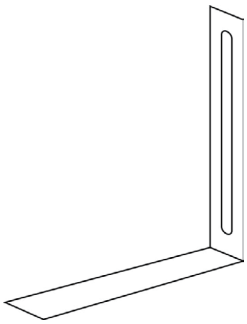

1.3.7 Plumb line (LAM09-06)

The plumb line is used to position the front and rear center points of the vehicle which helps to correctly position the five-line laser device and the laser reflector.

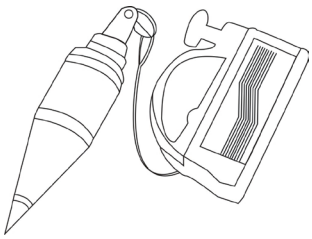

1.3.8 Target board storage bracket (LAM09-07)

The storage bracket is designed to store small target boards and larger pattern boards while not in use.

It is composed of two storage brackets and two connecting bearings. Before using it, please make sure to fasten the connecting bearings between the storage baskets.

To make the most of the storage bracket, you are suggested to place the frequently used target board in right position according to the indication as marked on the side of the bracket. Other target boards that are not frequently used can be stored into the aluminum tool box.

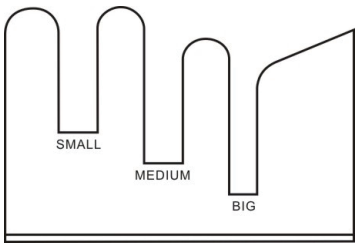

1.3.9 Target extension rod for Toyota (LAM09-08)

Generally the height of the calibration frame is specially designed to meet the calibration requirement of most vehicles, but for some vehicles with lower calibration height, the target extension rod is required.

The target extension rod is used for LDW system calibration on some Toyota vehicles. It needs to be secured onto the positioning plate (7) and then the target board attaches onto it.

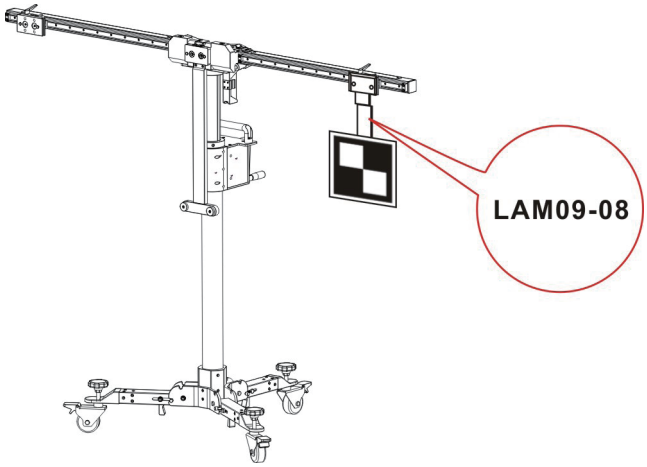

1.3.10 Target extension rod for Honda (LAM09-09)

Generally the width of the calibration frame is specially designed to meet the calibration requirement of most vehicles, but for some vehicles with wider calibration distance, the target extension rod is required.

The target extension rod is used for LDW system calibration on some Honda vehicles. It needs to be secured onto the positioning plate (7) and then the target board attaches onto it.

1.3.11 Laser range finder

The laser range finder is used to measure the height from the target / pattern board to the ground.

Since the laser range finder is not on the same level as the target board/pattern board, a precise tolerance value is preset in the ADAS calibration software for all vehicles and no more settings and calculations are required by users. When measuring the height, just follow the onscreen prompt height value to perform the calibration.

It is a Class 2 laser product in accordance with IEC 60825-1:2014. The product and batteries must not be disposed of with household waste.

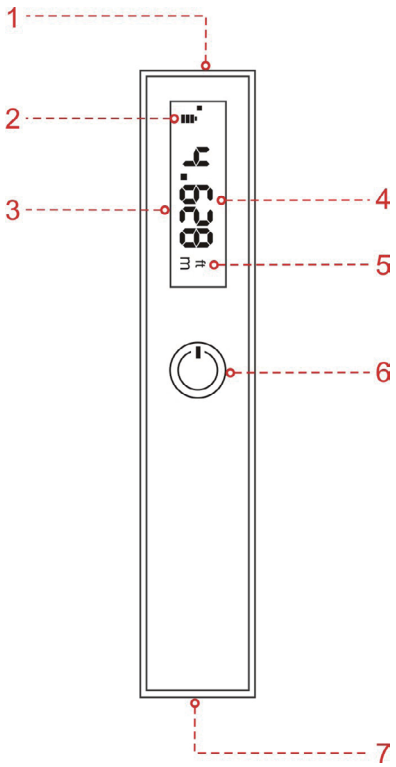

1. Laser

WARNING

- Do not stare into the laser beam or direct it towards other people.
- Do not dazzle other individuals.

2. Battery power indicator

3. Display screen

4. Measured result

5. Measurement unit

To switch between the measurement units, triple click the POWER button.

6. POWER button

Long press - turn the meter on / off.

Short press - Start / pause measuring.

7. Battery compartment

Technical parameters:

Range	0.1 ~ 25m (0.33~82ft)
Accuracy	± 1/152ft
Laser class	2
Laser type	635-650mm, power < 1mW
Battery	2 AAA batteries or Lithium battery
Dimensions	4 x 1.4 x 0.7 inch (100 x 35 x 18mm)
Operating Temperature	14°F ~ 104°F / -10℃ ~ 40℃

2 Initial Use

2.1 Place thecalibration frame

By default, it is folded for easier shipment. Follow the steps below to unfold it.

The heavy tool may tilt down and cause injuries, remember to always unfold the tool with the aid of a second person.

1. Take out the calibration frame and place it on a flat ground.
2. Push the lever (14) upwards as indicated in the following figure, and then pull the rolling caster (13) down on the ground.

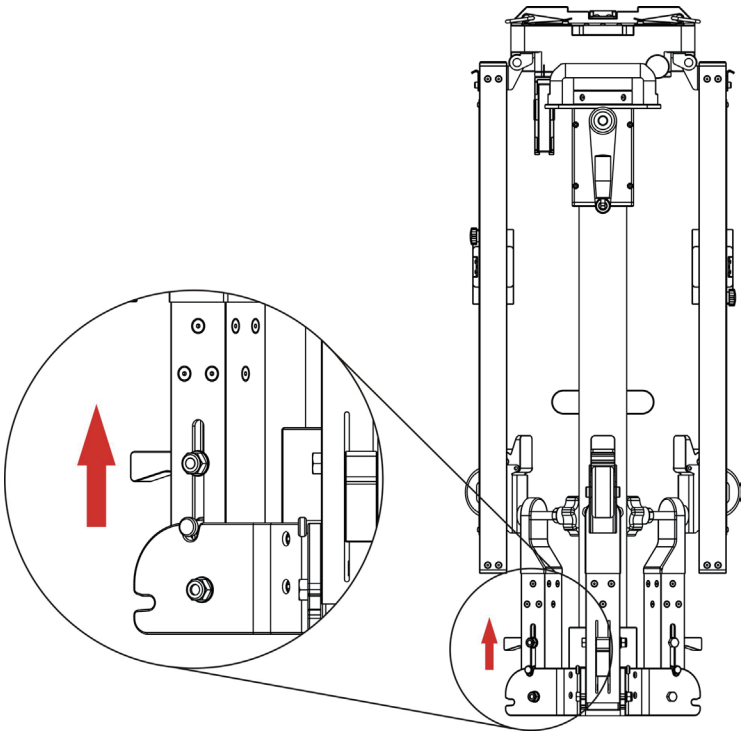

3. Repeat step 2 for other two rolling casters.
4. Hold the handle (19) and raise the lifter up slightly off the ground, these rolling casters will be fully unfolded and firmly sit on the ground automatically. Then lay the lifter down.

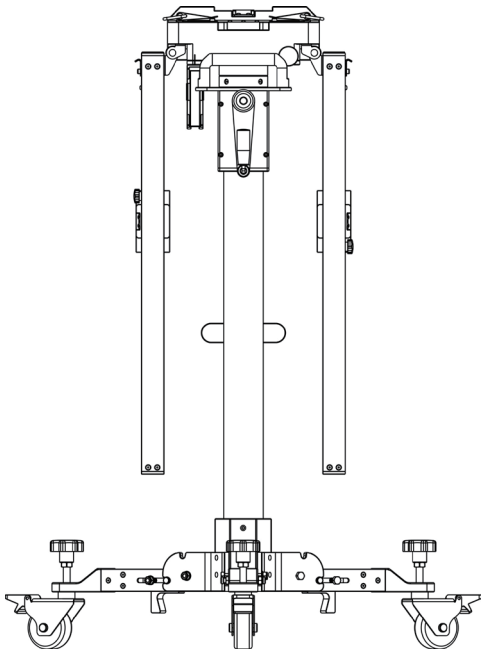

5. Pull the right crossbar (1) up until it fully attaches to the positioning bracket (B), then use the safety snap hook (5) to fix it.

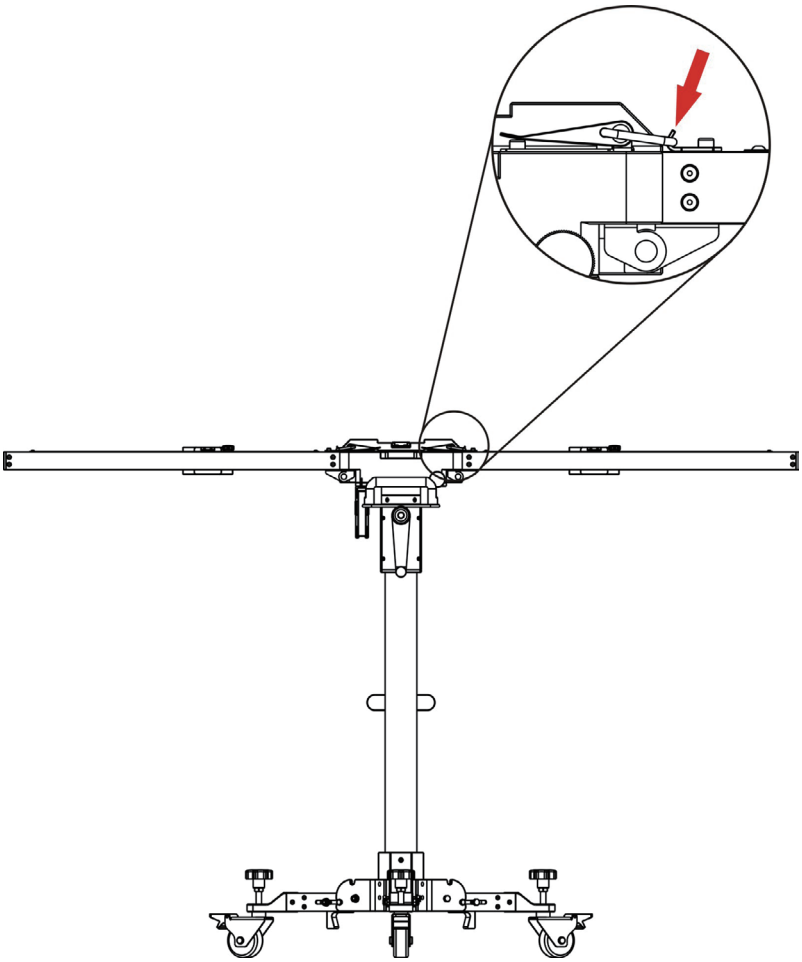

Beware of pinching hands while proceeding this step.

6. Repeat step 5 to unfold the left crossbar.

2.2 Activate ADAS function

By default, the calibration feature of the pre-installed diagnostic software of SmartSafe scanners is disabled. To ensure normal use of the calibration function of the diagnostic software, you need to activate the pin card to unlock the calibration function on the SmartSafe scanner (sold separately) first.

Follow the steps below to activate it. Here we take iSmartLink V for example to demonstrate how to activate the ADAS function.

Different SmartSafe scanners have different accesses to the ADAS function. For details, please refer to the user manual of individual scanner.

1. Press the [POWER] button on the diagnostic tool to turn it on.
2. Tap **ADAS** on the job menu to enter the following screen:

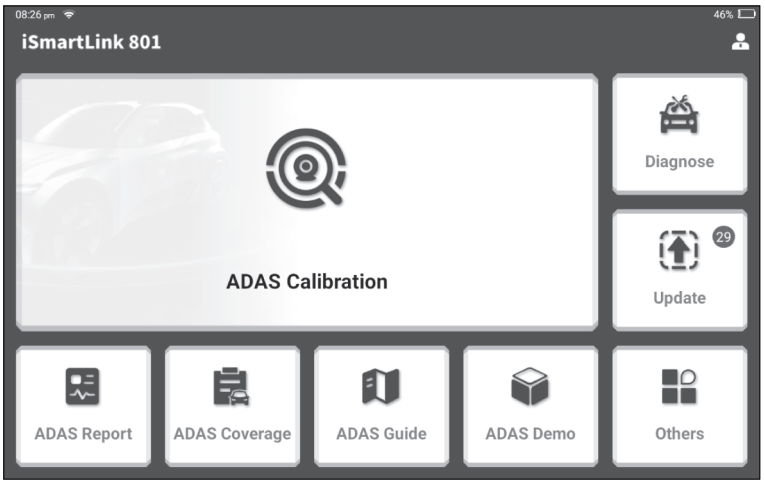

4. Tap **ADAS Calibration**. If the ADAS is not activated, the following prompt window displays.

5. Tap **Activate** to enter the ADAS activation screen.

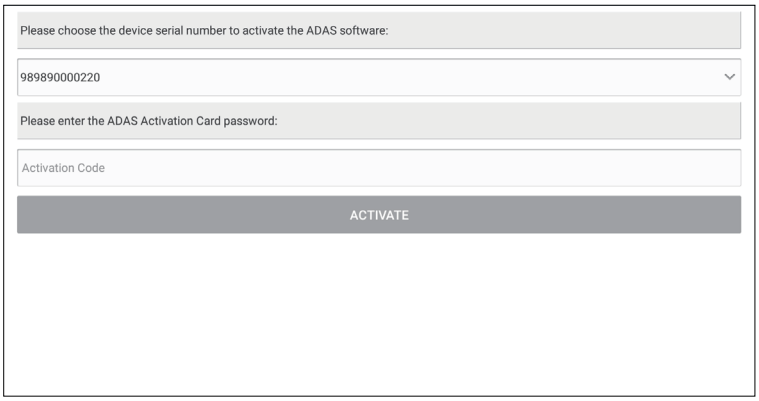

6. Scratch or scrap the designated area on the included Activation Card to reveal the password, and input the 24-digit password to activate it.
7. Now the ADAS function becomes accessible and is ready for use.

2.3 General Calibration Operations for LDW System

2.3.1 Precondition for the Use of the iSmartADAS Mobile

Regard the following in order to use the iSmartADAS Mobile:

- Vehicle system is working properly.
- No trouble codes stored in ECU memories.
- Prepare vehicle-specific calibration reference pattern.
- A SmartSafe's scanner supporting ADAS system calibrating is required (sold separately).
- Front & rear axle track is properly adjusted.
- To make you work smoothly and calibrate accurately, please make sure the following workstation requirement are met (See Chapter 2.4.1.1 ~ Chapter 2.4.1.3).

2.3.1.1 Workstation size

A. For front cameras

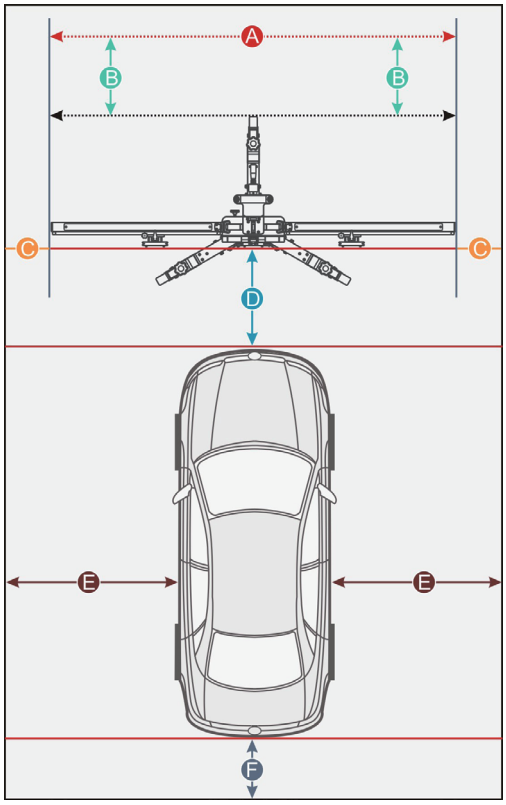

Distance A = the width of the cross member

Distance B = about 1m (from the cross member to the wall)

Distance C = at least 0.5m (from the edge of the cross member to other obstacles)

Distance D = varies from vehicle to vehicle, about 1.5m is strongly recommended (from the calibration panel to the vehicle)

Distance E = reserved for about 1m (from the vehicle to other obstacles)

Distance F = at least 0.5m (a lane for technician to walk through)

2.3.1.2 Workstation ground

Make sure the vehicle is parked with all wheels on an even floor surface.

Correct:

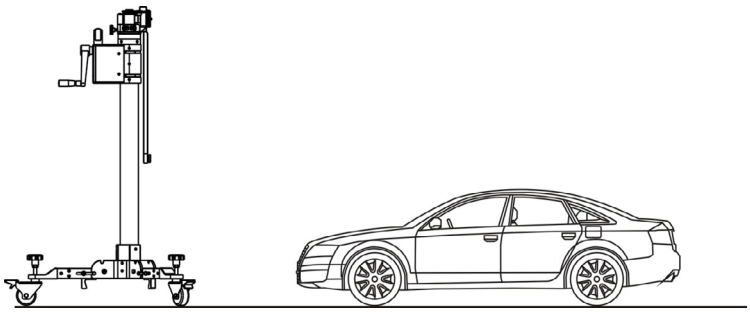

Wrong:

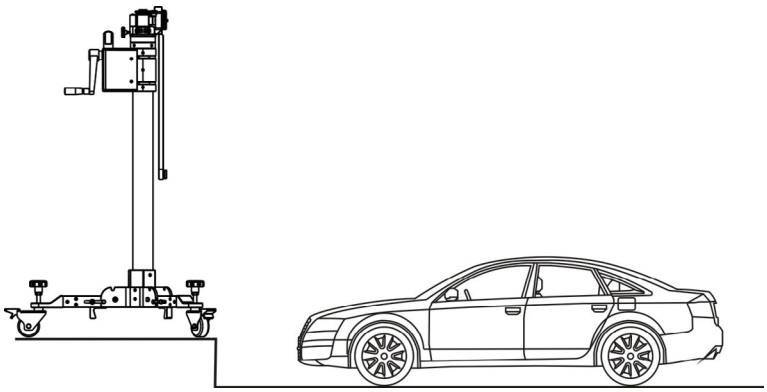

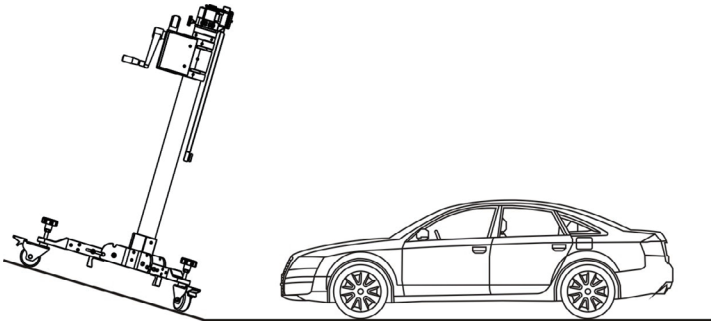

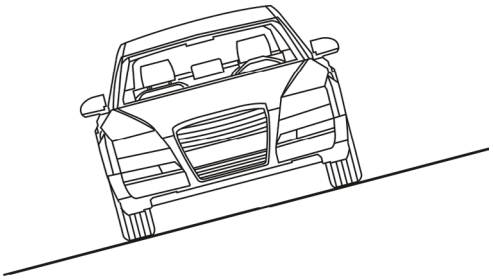

2.3.1.3 Workstation lighting

- The lighting system around the calibration workstation should be a non-frequency flash source, including but not limited to: LED light source, industrial lighting complying with international standards, dual light source in opposite phase.
- In the field of view of the camera, there should be no direct light source into the camera, otherwise the camera will reduce the exposure so that the captured calibration pattern becomes darker, adversely affecting the calibration.
- The light source should ensure that there is no reflected spot on the calibration panel.
- The light source should ensure uniform illumination distribution in the calibration workstation.
- The brightness of the light should not be changed, and ensure that there will be no other changing light source around the workstation, such as a driving vehicle with lights ON, etc.

2.3.2 Calibration Operation

The calibration operation should be performed strictly following the on-screen instructions on the diagnostic tool. For some vehicle models, calibration pattern and calibration tool are not mandatory. But for some camera-based ADAS, the calibration cannot be done without the help of calibration tool and calibration pattern. In this case, for the positioning of the calibration tool and vehicle, it is necessary for the user to manually finish it.

The following steps are needed when working with the iSmartADAS Mobile:

1. Determine the center line of the vehicle.
2. Determine the placement location of the iSmartADAS Mobile.
3. Place the iSmartADAS Mobile.
4. Adjust iSmartADAS Mobile in parallel with the vehicle.
5. Select and install the target/pattern board on the iSmartADAS Mobile.
6. Adjust the height of the target/pattern board.

Required accessories:

- Five-line laser device LAM09-01
- Cross laser module LAM09-02
- Laser reflector LAM09-03
- Auxiliary mirror LAM09-04
- L-shaped positioning bracket LAM09-05
- Plumb line LAM09-06

2.3.2.1 Determine the center line of the vehicle

1. Suspend a plumb line LAM09-06 against the center of the front vehicle emblem and let it naturally drop to the ground. Mark the front center point of the vehicle (Point **A**) on the ground directly under the plumb.

> Lightly flick the string with your fingers several times to confirm that the string is perpendicular to the ground.

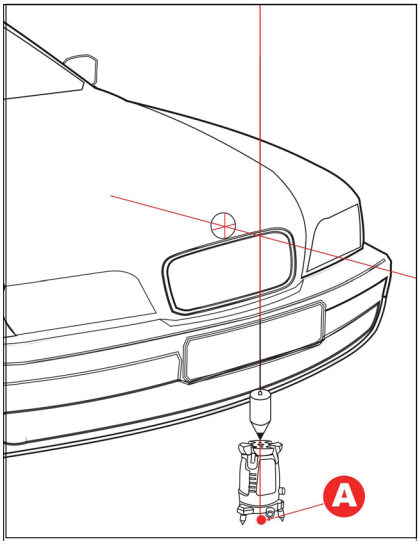

2. Place five-line laser instrument LAM09-01 at point **A** (the side of the laser instrument embedded with the logo opposite to the driving direction) to ensure that the red dot on the case aligns with the point A.
3. Suspend a plumb line LAM09-06 against the center of the rear vehicle emblem and let it naturally drop to the ground. Mark the front center point of the vehicle (Point **B**) on the ground directly under the plumb.

Lightly flick the string with your fingers several times to confirm that the string is perpendicular to the ground.

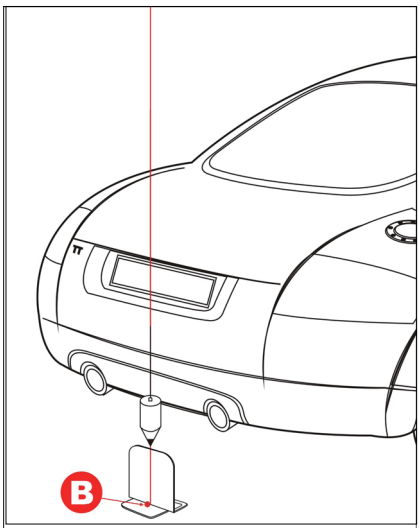

4. Place the laser reflector LAM09-03 parallel to the vehicle and ensure that the reflective stripe is aligned with point **B**.
5. Place the auxiliary mirror LAM09-04 in front of the vehicle.
6. Ensure that five-line laser instrument LAM09-01 is level, turn on the laser beams of the five-line laser instrument LAM09-01.

If the vehicle chassis is too low, the five-line laser instrument LAM09-01 cannot be placed under it, just move it a bit far away from the vehicle emblem.

7. Observe the position of the laser beam with the auxiliary mirror LAM09-04. Rotate the fine-tuning knob (5) of five-line laser instrument LAM09-01 to ensure the longitudinal laser beam aligns with the reflective stripe of the laser reflector LAM09-03.

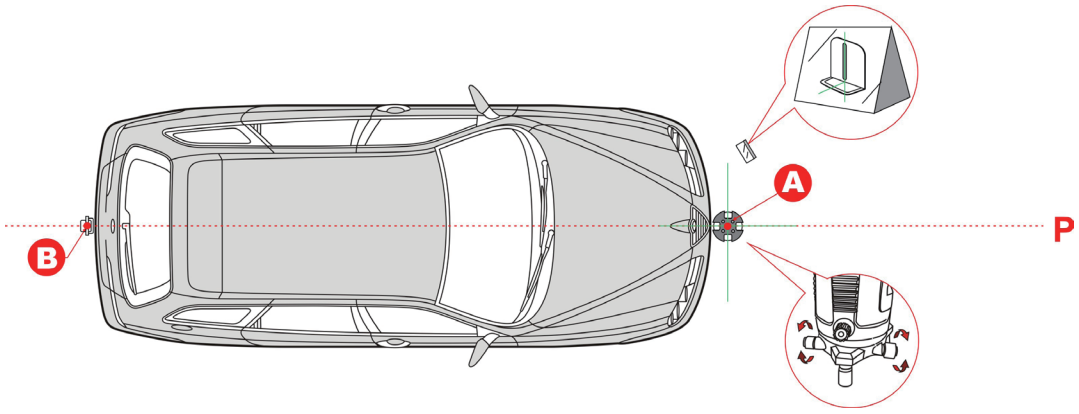

2.3.2.2 Determine the placement location of the iSmartADAS Mobile

The placement location of the iSmartADAS Mobile varies with the vehicles being serviced. Please strictly follow the on-screen prompts to determine it. In general, it includes the following possible options:

A. Measuring target/pattern board to front bumper

Mark point **C** in front of point **A** on the center line **P**, making sure that the distance (L) between point **A** and point **C** is the value specified in the on-screen app instructions.

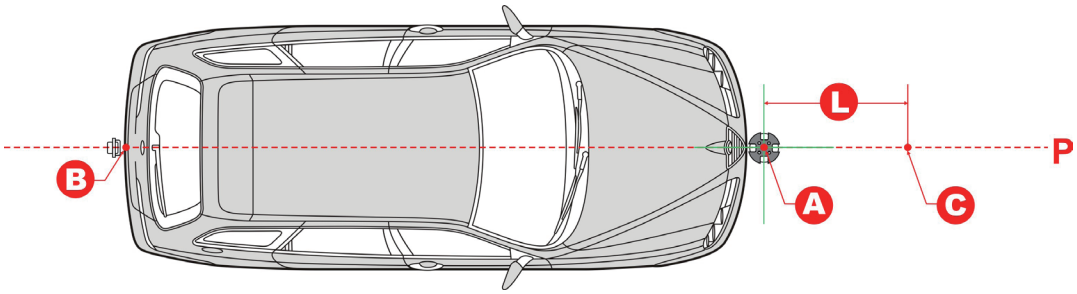

B. Measuring target/pattern board to front hub center

1. Place L-shaped positioning bracket LAM09-05 in the front hub center.
2. Mark point **D** in front of the L-shaped positioning bracket, making sure that the distance (L) between point D and L-shaped positioning bracket is the value specified in the on-screen app instructions.
3. Mark point **C** on the center line **P** to make the line from point **C** to point **D** is perpendicular to the center line P.

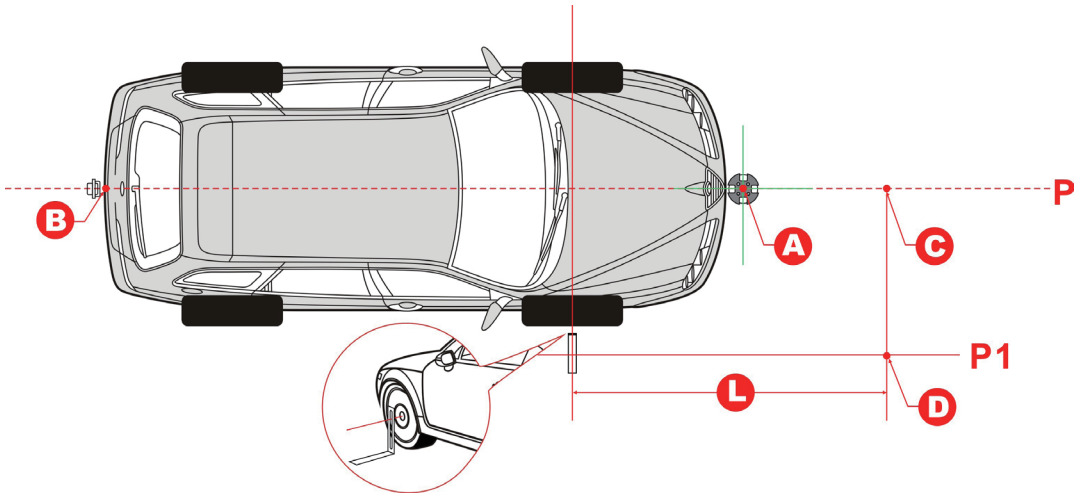

C. Measuring target/pattern board to front camera

1. Place L-shaped positioning bracket LAM09-05 on the side of the vehicle to align it with the camera.

2. Mark point **D** in front of the L-shaped positioning bracket, making sure that the distance (L) between point **D** and L-shaped positioning bracket is the value specified in the on-screen app instructions.
3. Mark point **C** on the center line **P** to make the line from point **C** to point **D** is perpendicular to the center line **P**.

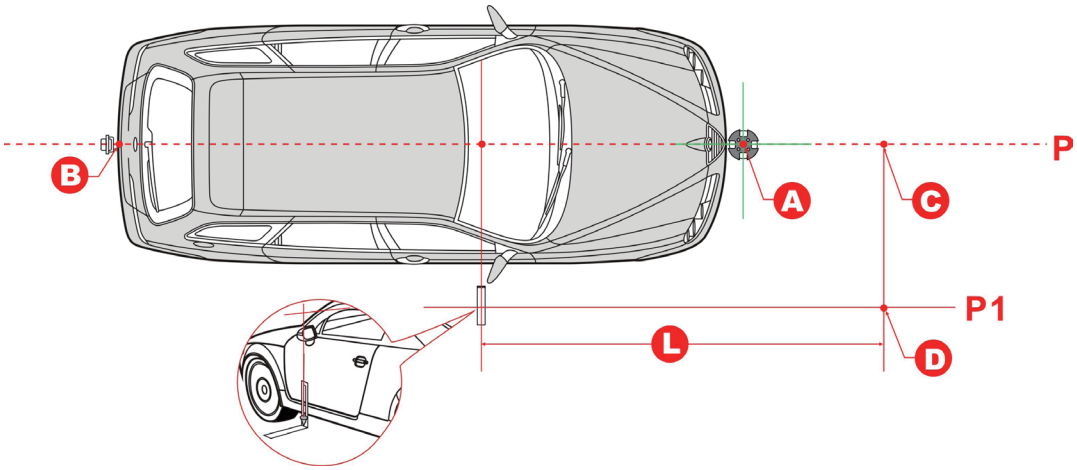

2.3.2.3 Place the iSmartADAS Mobile

1. Place the cross laser instrument LAM09-02 close to the magnetic center positioning plate of the calibration frame with the beam output aiming at the vehicle front and it will be automatically attached onto the plate.
2. Turn the cross laser instrument LAM09-02 on, and then place the ADAS Mobile to make the laser cross point of cross laser instrument LAM09-02 overlap point **C**.
3. Observe the level gauge bubbles on the crossbar. If the bubbles are not centered, turn the adjustment screws to adjust until the bubbles are centered.
4. Fix the ADAS Mobile in place.

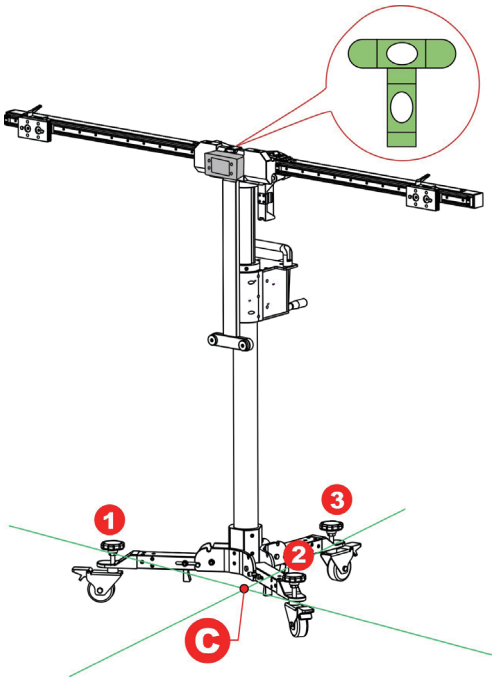

2.3.2.4 Adjust the iSmartADAS Mobile in parallel with the vehicle

1. Use the fine-tuning knob to adjust the crossbar position so that the longitudinal laser beam of cross laser instrument LAM09-02 overlaps the center line (and the center of the vehicle emblem), and then the

crossbar is parallel to the vehicle.

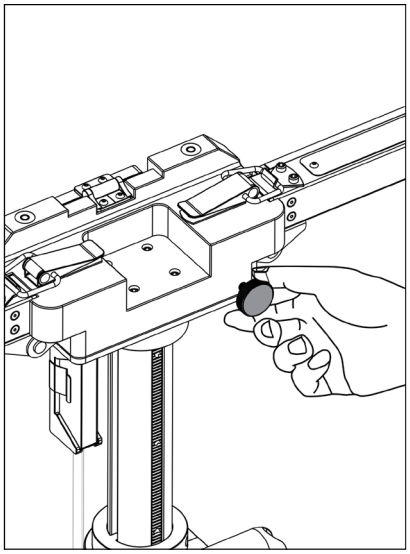

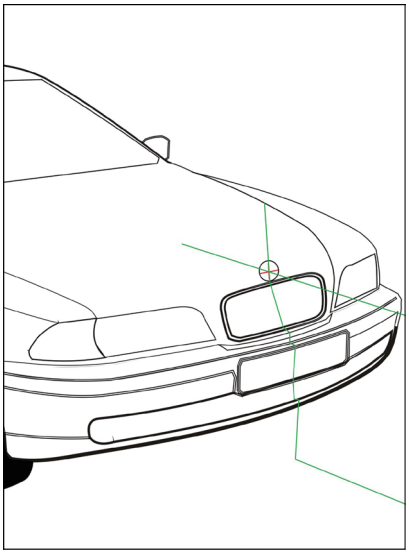

2. Turn off the cross laser instrument LAM09-02 and detach it from the center positioning plate.
3. Step the parking safety mechanism (12) down to fix the calibration frame to prevent it from moving.

2.3.2.5 Select the desired target / pattern board

1. According to the vehicle being serviced, choose the corresponding target /pattern board.
2. For pattern board (larger), follow the steps below to install it.

   1). Pull the center positioning plate outwards and rotate it until it vertically stands on the calibration frame.

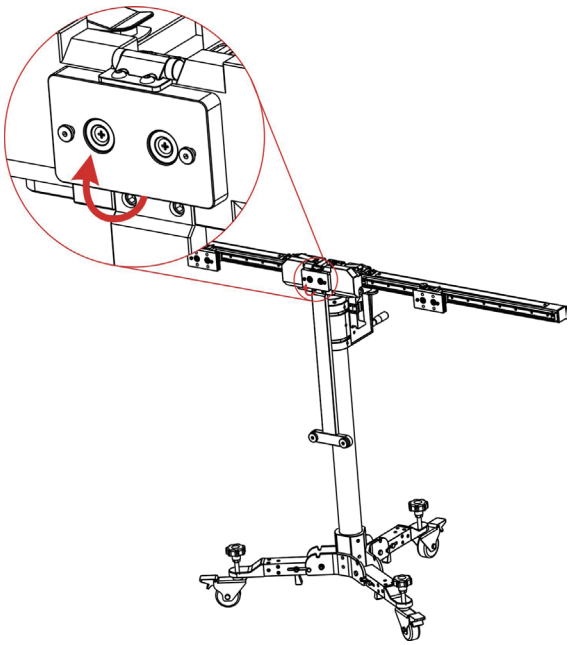

   2). Locate the mounting holes on the calibration pattern board. Please note that there are two preset installation holes on the center of the bottom of each big pattern board.

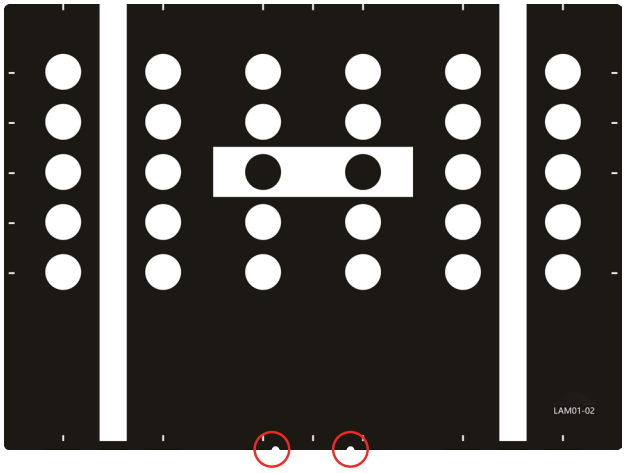

3). Place the mounting holes on the pattern board holder.

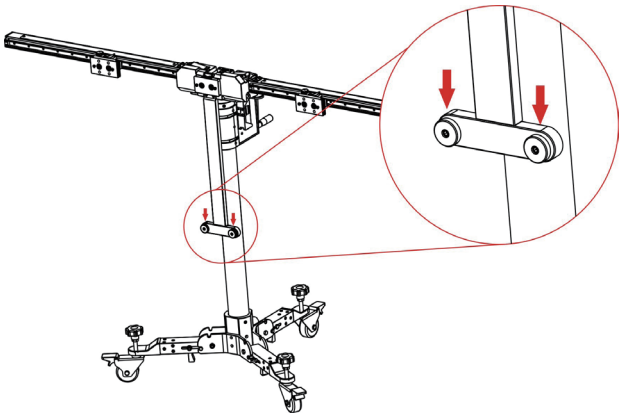

4). Slide the positioning plates at both ends until they firmly secure the pattern board.

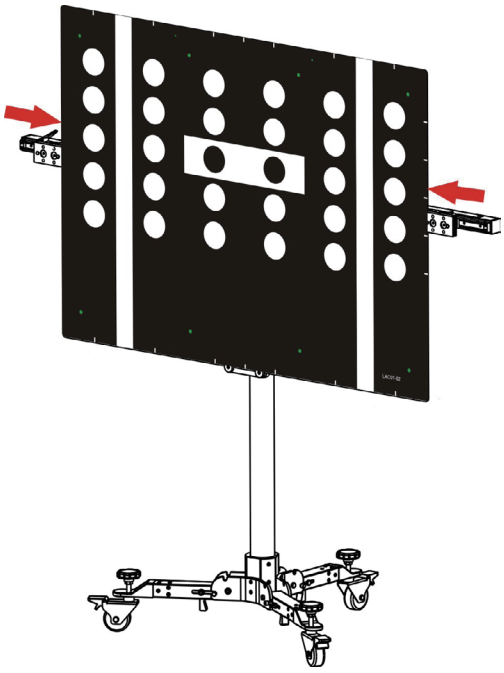

2. For target board (smaller), follow the steps below to install it.

   1). Please note that there are two preset mounting holes on the back of each small target board. Align the holes with the mounting hook on the positioning plate and insert them into the plate, then gently press the board down until it is firmly secured on the plate.

   2). According to the on-screen ADAS calibration instructions on the diagnostic tool,

   - If the target board (e.g. LAM01-06-2) is installed on the left or right positioning plate, slide the positioning plate along the crossbar to the desired position (a red scale indicator (4) on the top of the bracket points at the scale ruler (2) on the crossbar).

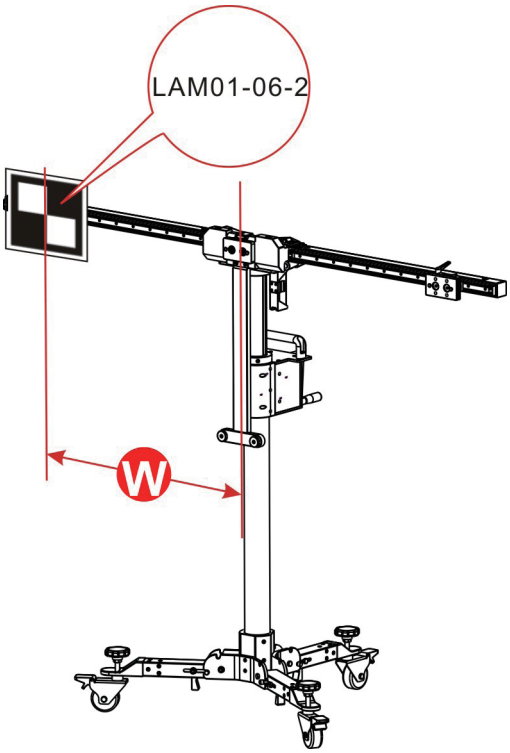

   - If the target board mats (e.g. LAM01-04-L&LAM01-04-R) are installed, slide the positioning plate along the crossbar to the desired position (a red scale indicator (4) on the top of the bracket points at the scale ruler (2) on the crossbar). In this case, they should be installed in the same position on the crossbars.

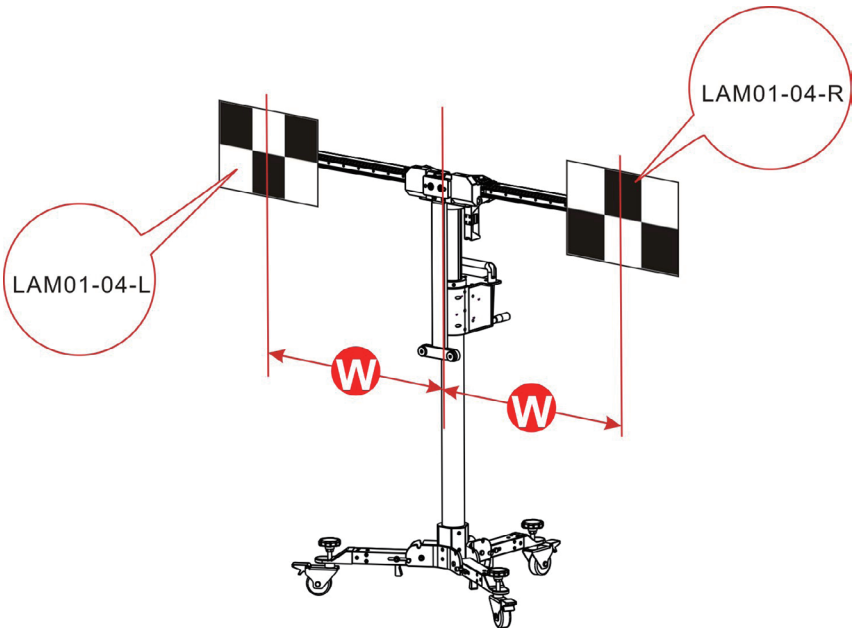

- If the target board extension rod (e.g. LAM09-08 / LAM09-09) is required (in the condition that the height or width of the X-431 ADAS Mobile cannot meet the specified value), first attach the extension rod on the positioning plate, and then install the target board on the extension rod.

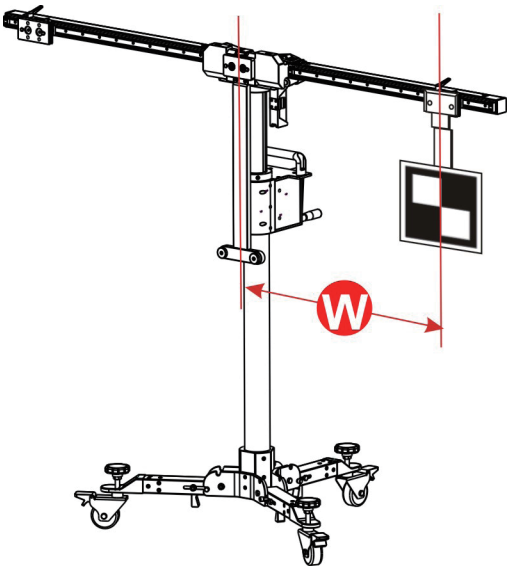

For LAM09-08 horizontal extension rod, you are recommended to use the included lock cover to lock the extension rod to prevent it from being displaced due to the installed heavy target board. Hold it and cover it on the extension rod (See the following figure).

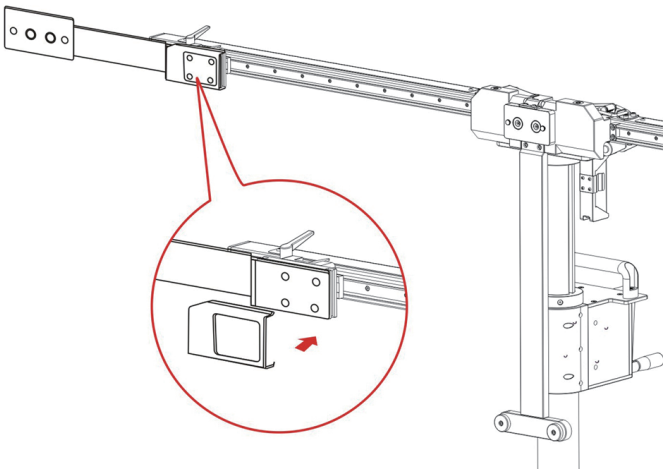

- If the target board (e.g. LAM01-01) is installed on the center positioning plate, go to the next step.

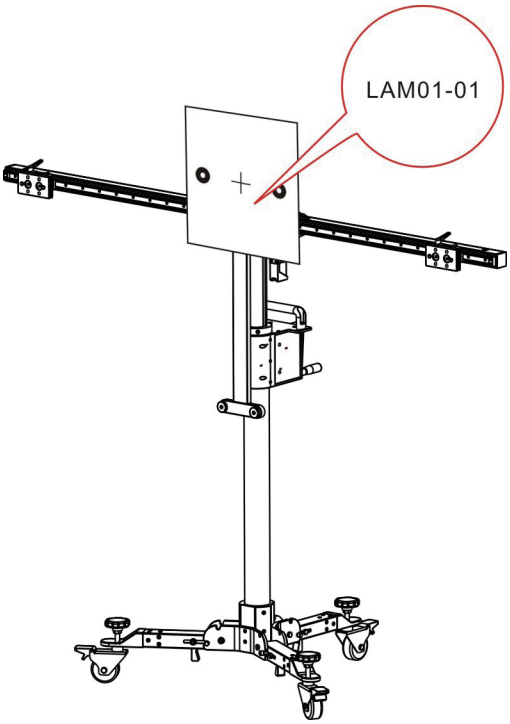

2.3.2.6 Set the height

Use the hand crank (18) to adjust the height until the value displayed on the laser range finder matches the value specified in the on-screen instructions.

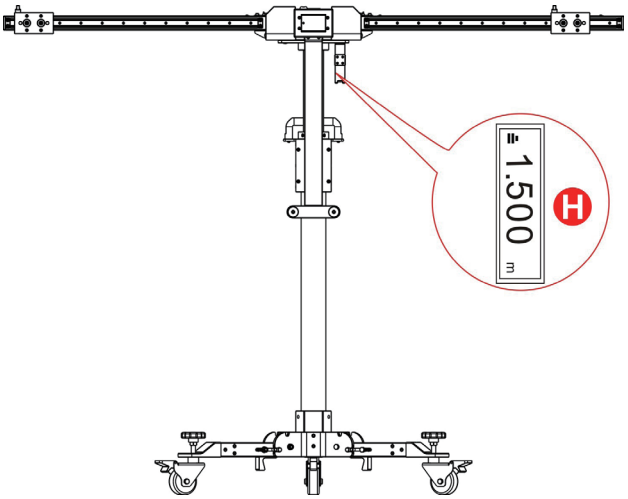

Since the laser range finder is not on the same level as the target board/pattern board, a precise tolerance value is adjusted for the calibration height of each vehicle on the diagnostic tool and no more settings and calculations are required by users.

3 Start Calibration

3.1 Calibrating the front camera

This chapter describes a general operation procedure of front camera calibration. Here we take **AUDI Q 5 USA/Canada 2017** for example to demonstrate how to make calibration.

3.1.1 Why to calibrate?

1). The following diagnostic trouble codes are found on the vehicle (No or incorrect basic setting/adaption):

- B201000 - No basic setting
- C110A54 - No basic setting
- B201100 - Wrong basic setting

2). The following repairs and replacements are made on the vehicle:

- Front camera has been replaced.
- The windshield has been removed, installed or replaced.
- Chassis structure has been changed/adjusted.
- One of the vehicle level sensors of the wheel damping electronics or the level control has been replaced.

3.1.2 Operation Notes

Make sure the following conditions are met:

On vehicle & diagnostic tool

- Use the AUDI diagnostic software version 28.50 or above to perform the calibration.
- Only the calibration-related fault trouble codes are found on the vehicle, all other fault memory records must have been cleared.
- Make sure that the VCI device has been plugged into the vehicle's DLC.
- Turn on the ignition.
- Park the unloaded vehicle along with the four wheels on a horizontal surface.
- All vehicle doors must be closed.
- Wheel pressure is set to the standard value.
- Turn off the headlamp.
- Camera view is free and clean.

On calibration tool

- The front wheel is at straight ahead position, and the steering angle sensor is set to zero.
- Use the LAM01-02 calibration pattern.

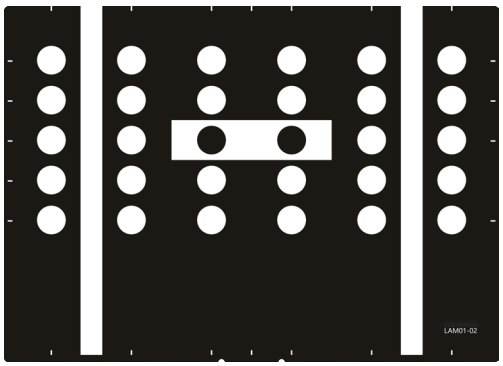

- ADAS calibration pattern is placed in parallel in front of the vehicle.
- ADAS calibration pattern is placed in the center of the front of the vehicle.
- The distance from calibration pattern to the center point of the front wheel hub is 1500 mm.

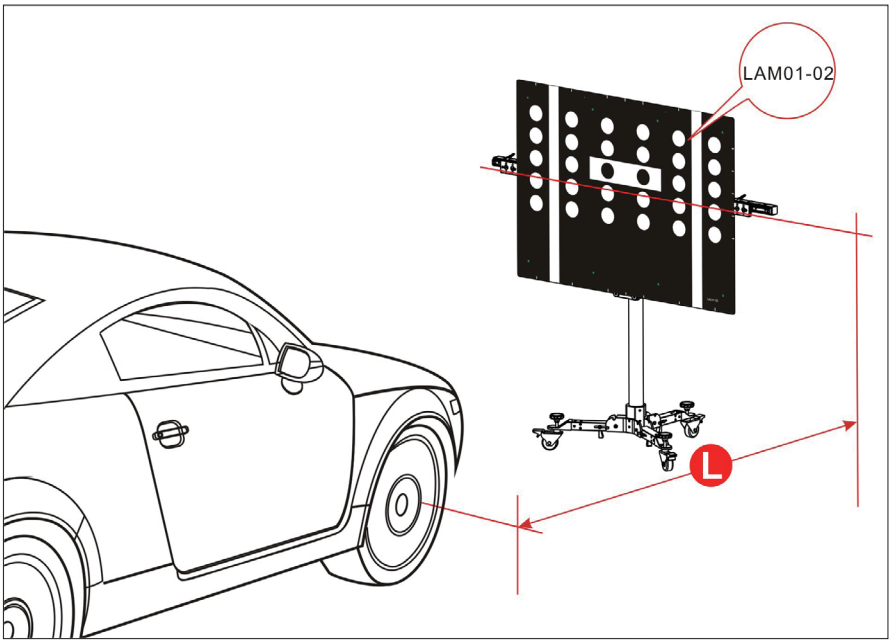

The following table formulates the reference distance range for other Audi models when performing front camera calibration.

1500mm		1700mm	
AUDI A3 2013>	2013~2018	AUDI Q2 2017>	2017~2018
AUDI A3 USA /CANADA 2013>	2014~2018	AUDI Q3 2012>	2012~2018
AUDI A4 2016>	2016~2018	AUDI Q3 USA /CANADA 2012>	2014~2018
AUDI A4 USA /CANADA 2016>	2016~2018	AUDI Q5 2017>	2017~2018
AUDI A5 2017>	2017~2018	AUDI Q5 USA /CANADA 2017>	2017~2018
AUDI A6 2011>	2011~2018	AUDI Q7 2016>	2016~2018
AUDI A6 USA /CANADA 2011>	2011~2018	AUDI Q7 USA /CANADA 2016>	2015~2018
AUDI A7 2011>	2011~2018		
AUDI A7 USA /CANADA 2011>	2011~2018		
AUDI A8 2010>	2010~2018		
AUDI A8 USA /CANADA 2010>	2010~2018		
AUDI A5 USA /CANADA 2016>	2017~2018		
AUDI TT 2015>	2015~2018		
AUDI TT USA /CANADA 2015>	2015~2018		

- Make sure the value displayed on the laser range finder screen is 1130mm (the height from the center of the calibration pattern to the ground).

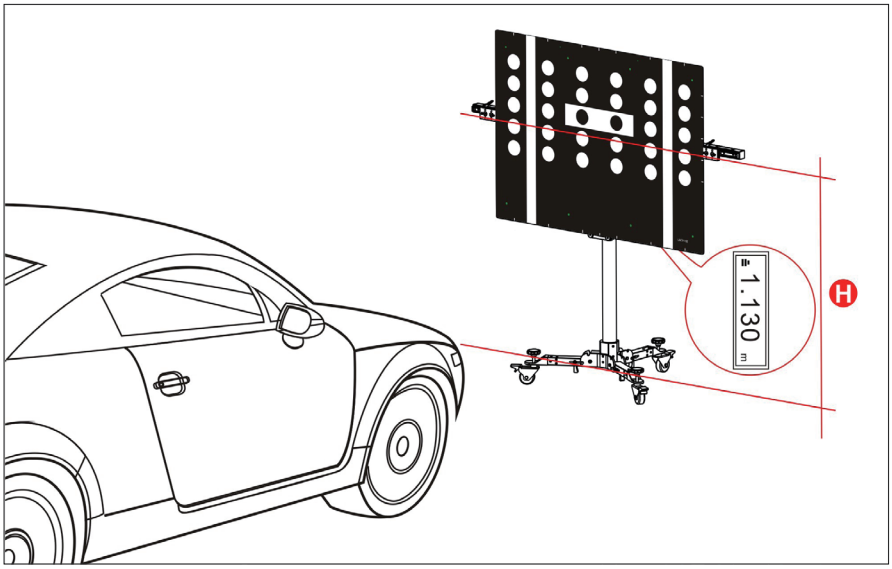

3.1.3 Start calibration

Follow the steps below to proceed:

1. Tap **ADAS** on the Job menu of the diagnostic tool.
2. The diagnostic tool starts communicating with the VCI and reading VIN. After the VIN is successfully decoded, a screen similar to the following appears:

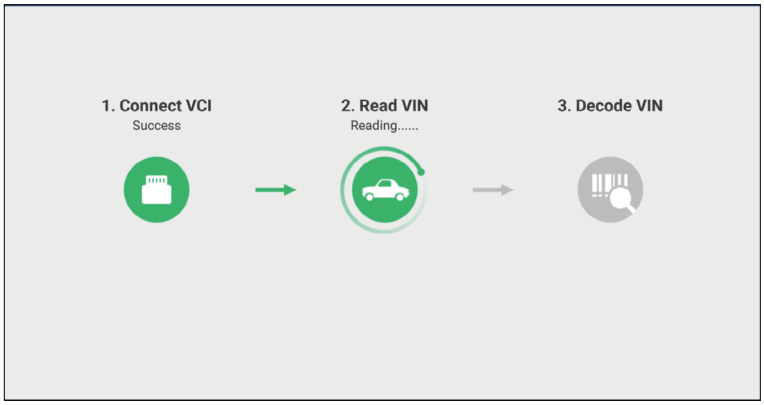

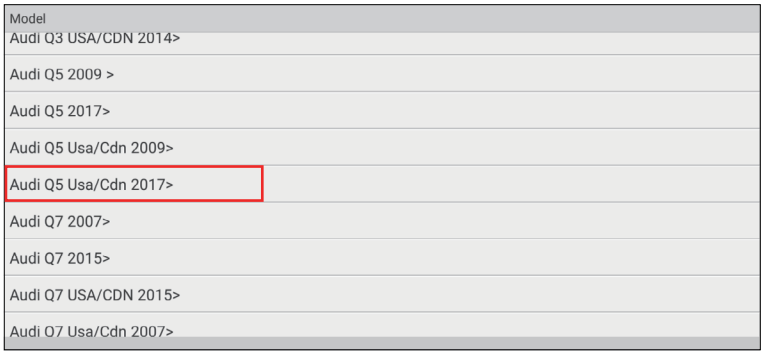

3. Select **Audi Q5 Usa/Cdn 2017>**.

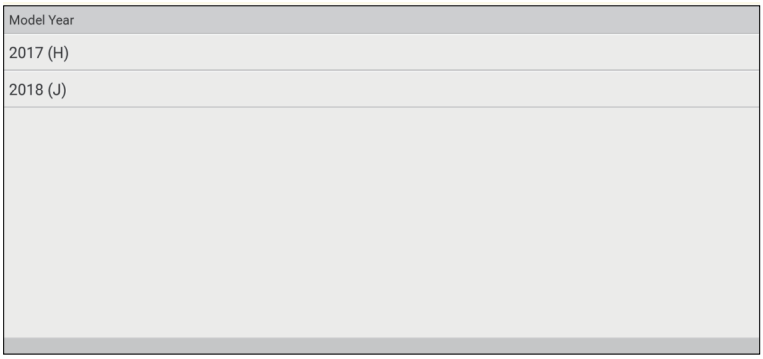

(Select **2018 (J)**)

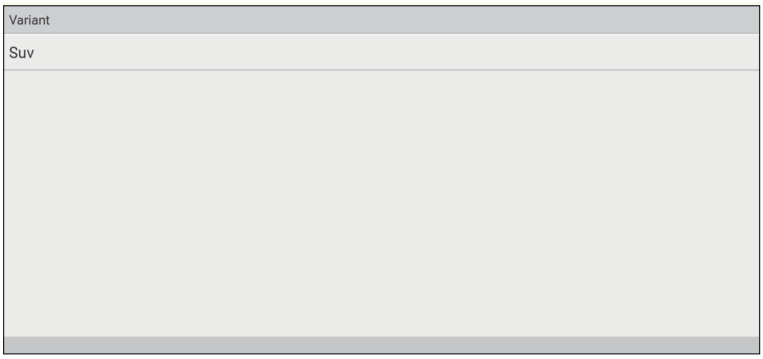

(Select **SUV**)

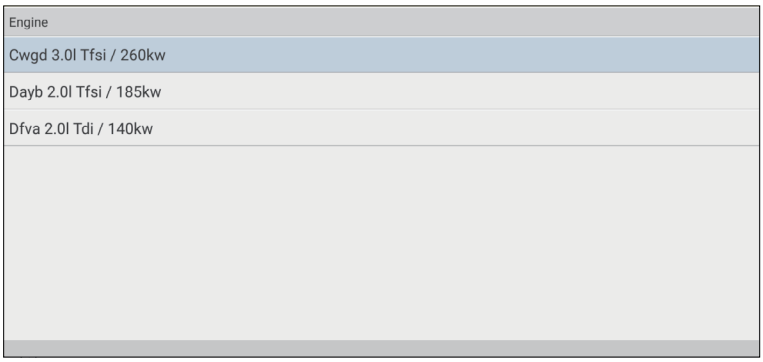

(Select Engine - **Dfva 2.0l Tdi/140kw**)

4. Double check your selections and tap **Confirm** to go to the next step.

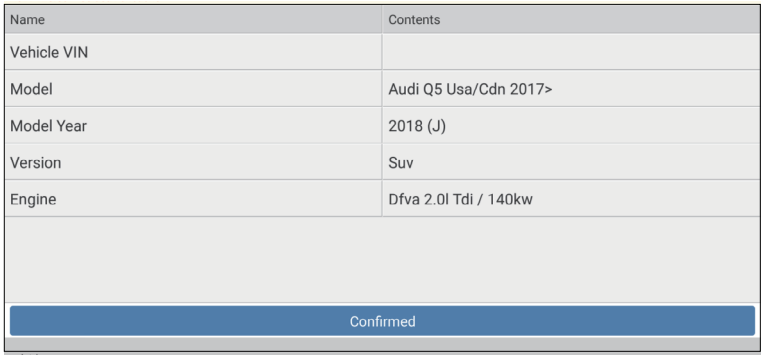

Name	Contents
Vehicle VIN	
Model	Audi Q5 Usa/Cdn 2017>
Model Year	2018 (J)
Version	Suv
Engine	Dfva 2.0l Tdi / 140kw

Confirmed

5. Select the system to be calibrated.

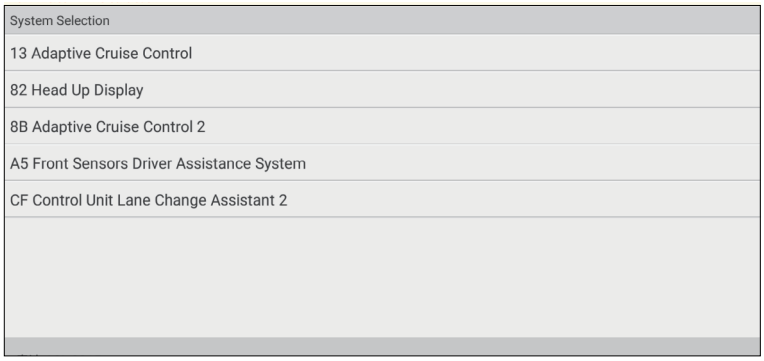

System Selection
13 Adaptive Cruise Control
82 Head Up Display
8B Adaptive Cruise Control 2
A5 Front Sensors Driver Assistance System
CF Control Unit Lane Change Assistant 2

(Select **A5 Front Sensors Driver Assistance System**)

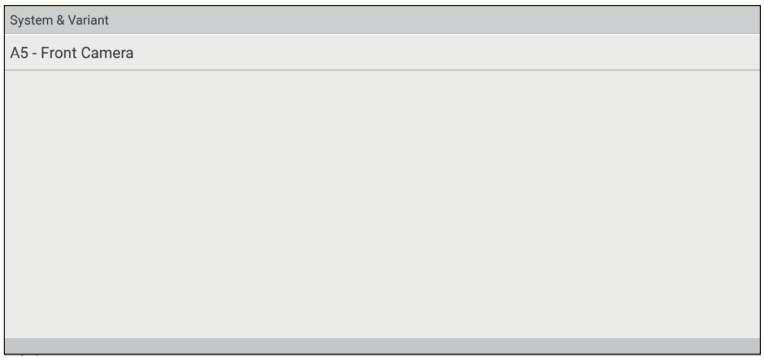

System & Variant
A5 - Front Camera

(Select **A5 - Front Camera**)

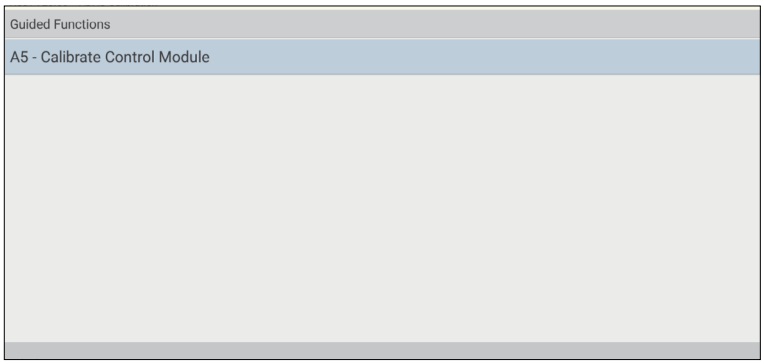

Guided Functions
A5 - Calibrate Control Module

(Select **A5 - Calibrate Control Module**)

6. Tap **iSmartADAS Mobile** to continue.

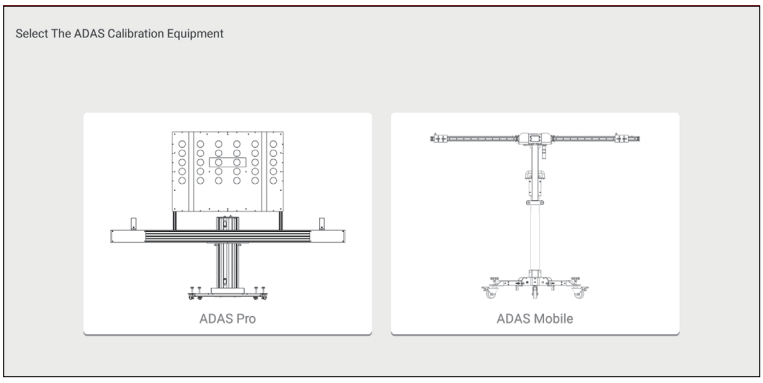

7. Swipe the screen to carefully read all calibration conditions and tips and double check all pre-calibration preparations are well made or not. If yes, tap **Complete/Continue**.

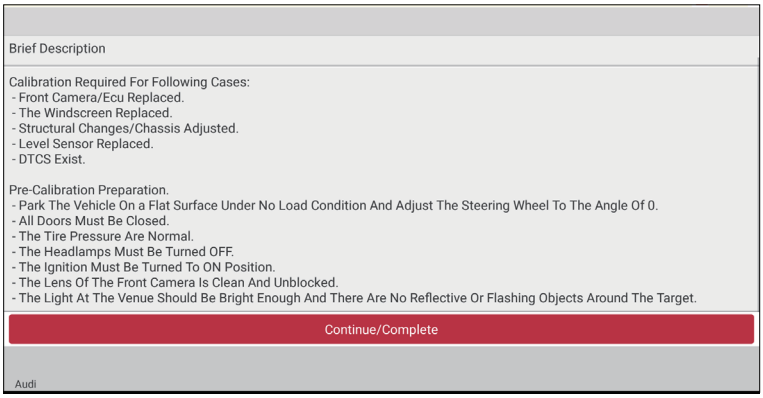

8. Check if the following steps have been done or not.
   1). Determine the center line of the vehicle being tested.

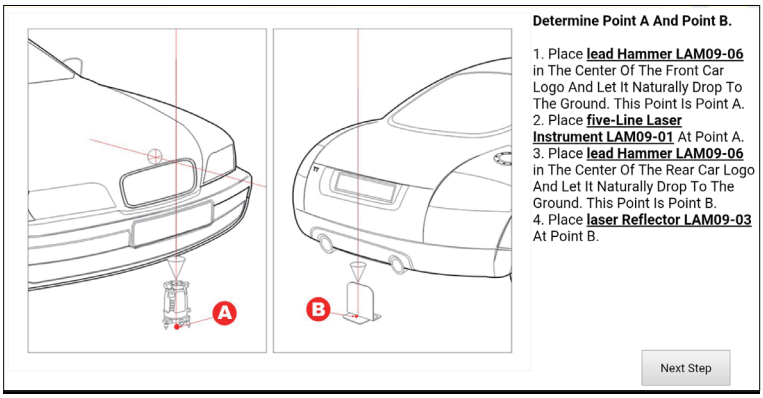

(Tap **Next Step**)

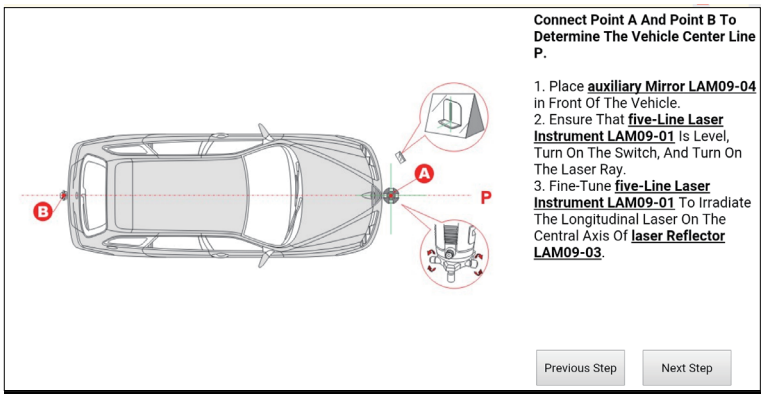

(Tap **Next Step**)

2). Determine the placement location of the iSmartADAS Mobile.

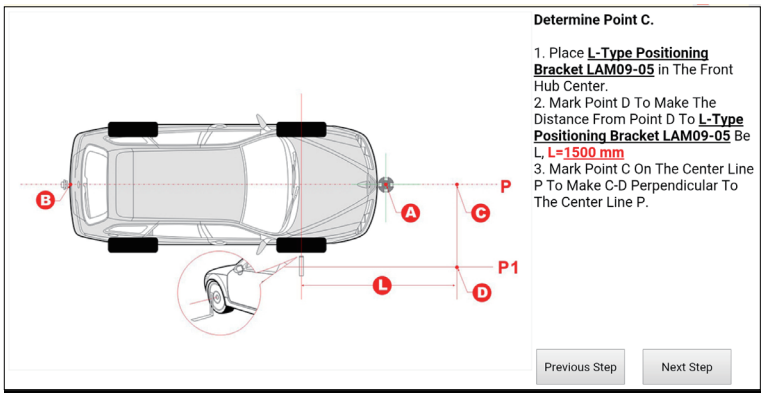

(Tap **Next Step**)

3). Place the iSmartADAS Mobile.

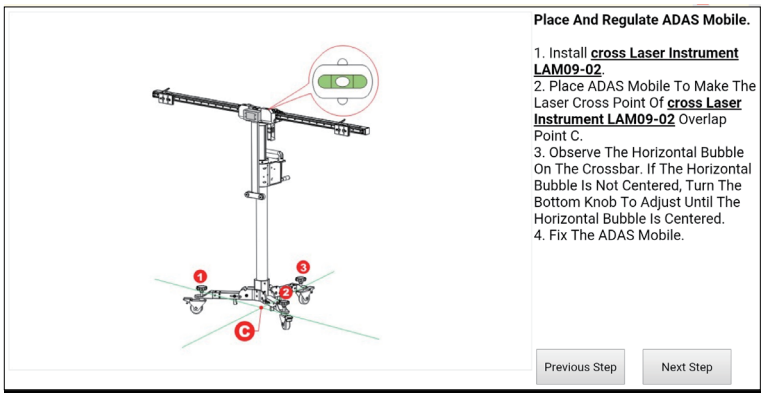

(Tap **Next Step**)

4). Adjust the iSmartADAS Mobile in parallel with the vehicle.

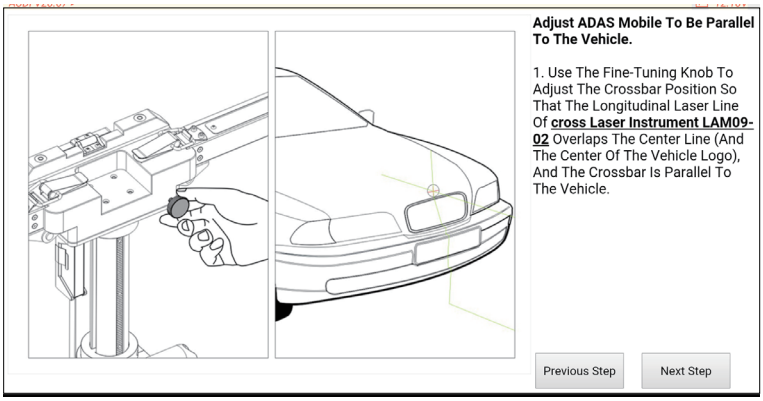

(Tap **Next Step**)

5). Set the height.

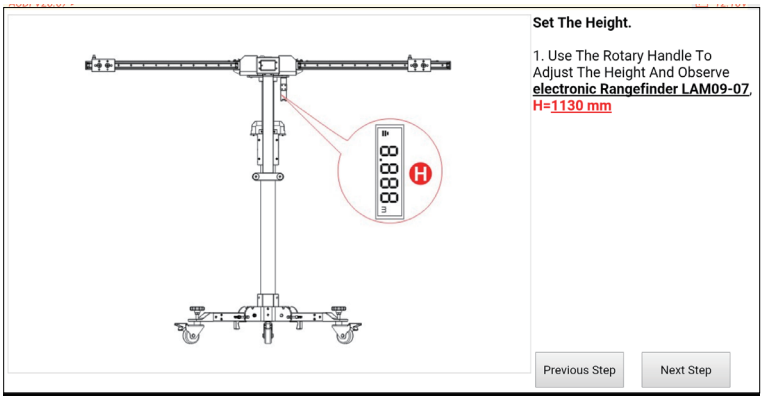

(Tap **Next Step**)

6). Select the LAM01-02 pattern board.

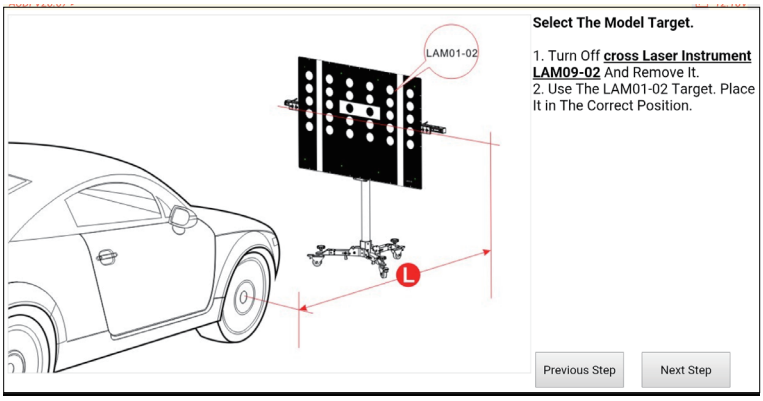

(Tap **Next Step**)

9. The following dialog box displays on the screen. Before calibrating, make sure that all DTCs that are not related to the calibration have been erased. If yes, tap **Yes** to go to the next step.

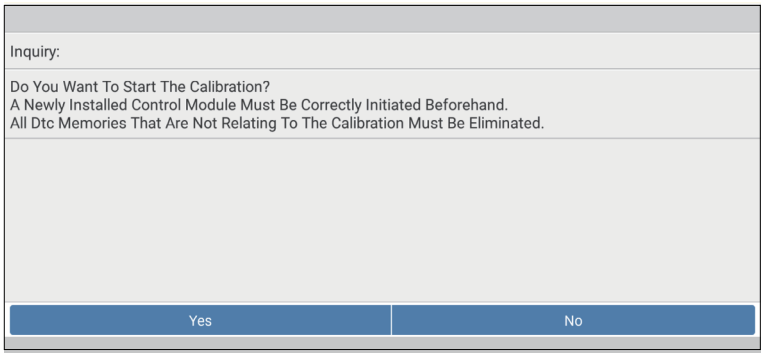

(Tap **Yes**)

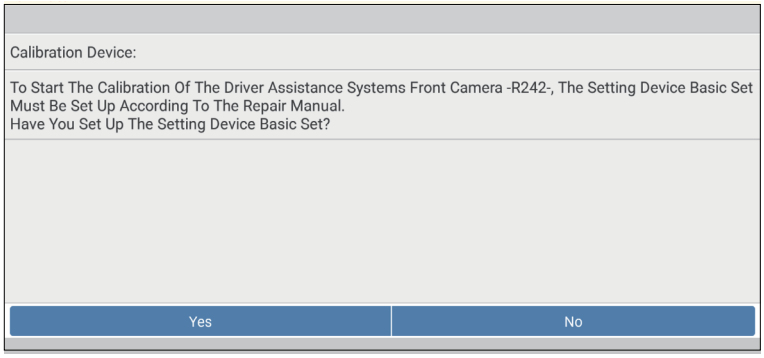

(Tap **Yes**)

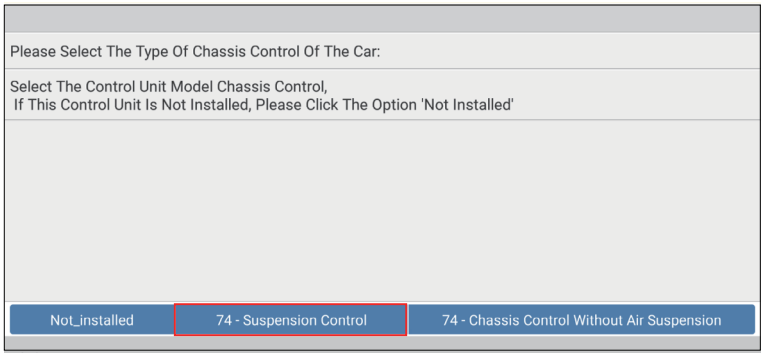

10. Select **74 - Suspension Control** to choose how to set the vehicle level system to normal level.

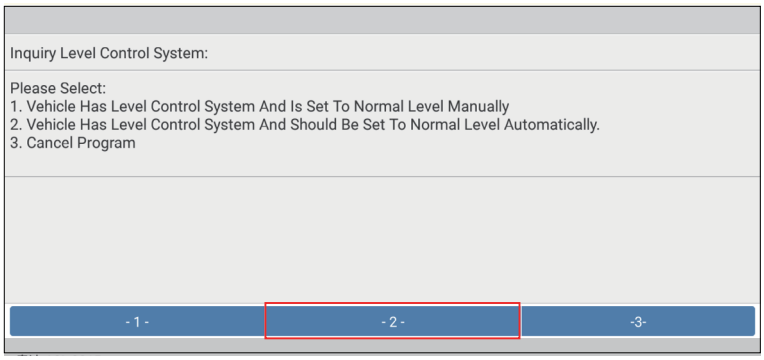

(Select **-2-**)

11. Tap **-2-** (Vehicle has level control system and should be set to normal level automatically). Set the drive

select function of the vehicle to COMFORT to set the suspension system to normal level and lock it.

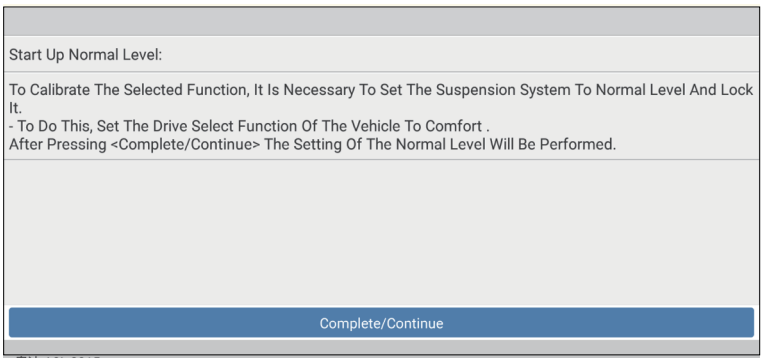

12. Tap **Complete/Continue**, follow the on-screen instruction to finish the startup, evaluate chassis status and level control system, and enter the wheel housing edge values (*please enter the values in millimeter).

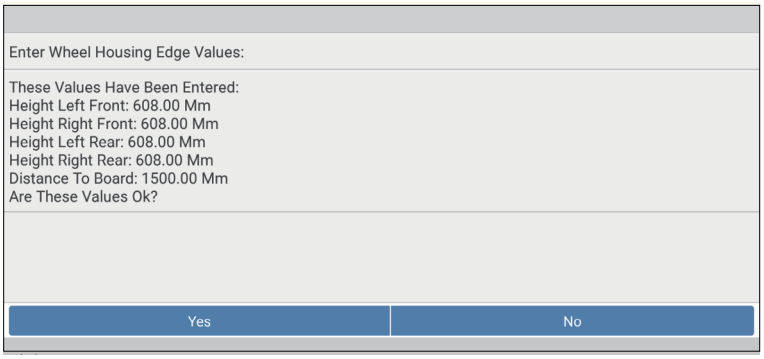

13. Double check whether all values are correct or not. Tap **Yes** to write the adaption values into the driver assistance systems.

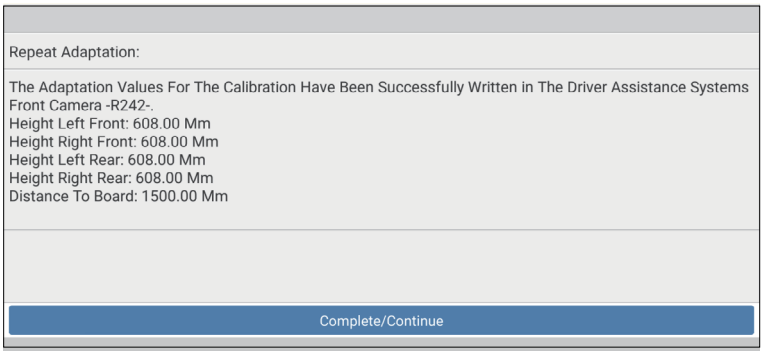

14. Tap **Complete/Continue** to set the calibration mode, start calibration and read calibration values.

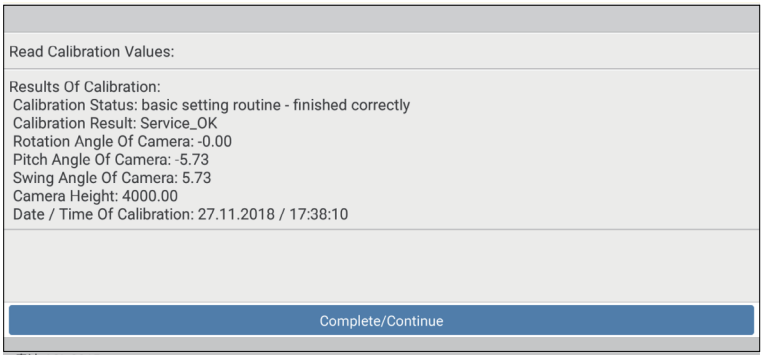

15. Tap **Complete/Continue** to inquire the level control system and select the type of chassis control of the vehicle.

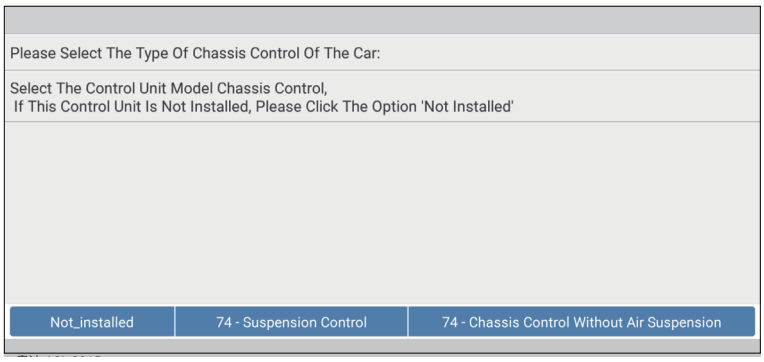

16. Select **74 - Suspension Control** to reset the level control system to normal control mode and activate the level control system of the suspension system.

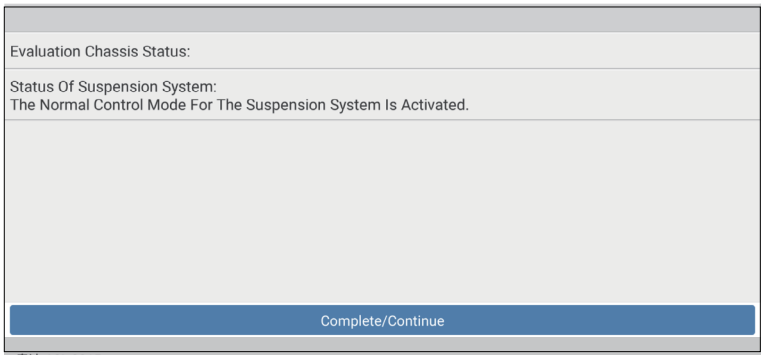

17. Tap **Complete/Continue** to finish the calibration of front camera. Next the diagnostic tool will clear the previously existed diagnostic trouble codes.

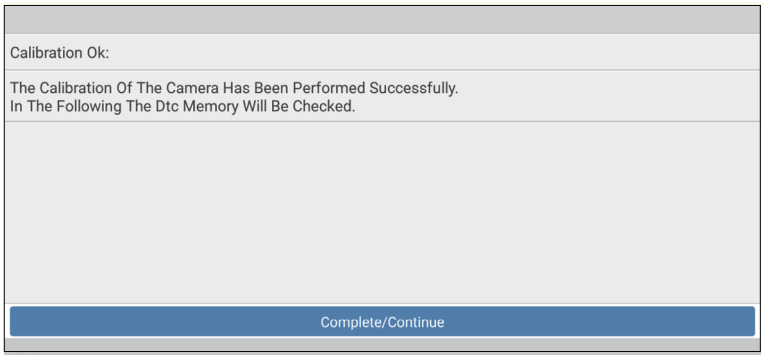

18. Tap **Complete/Continue** to wait the diagnostic tool to automatically erase the DTCs related to the calibration.

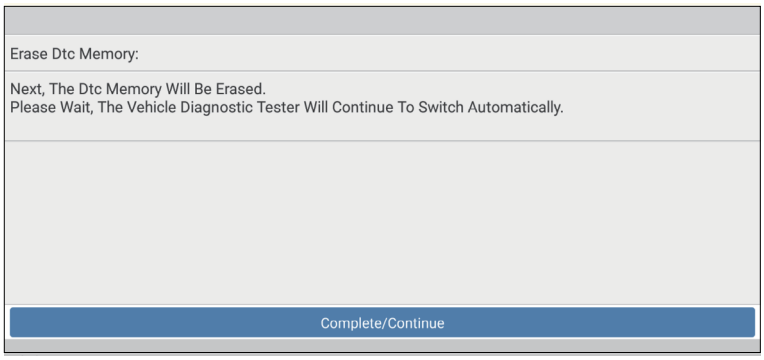

19. Tap **Complete/Continue** to confirm whether the DTCs have been erased or not.

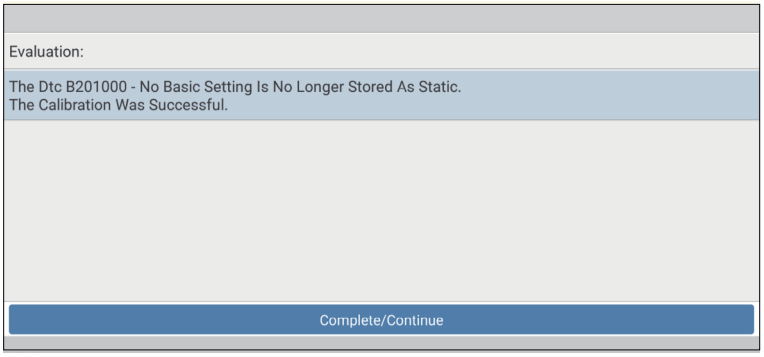

20. Tap **Complete/Continue** to confirm and end the whole calibration session.

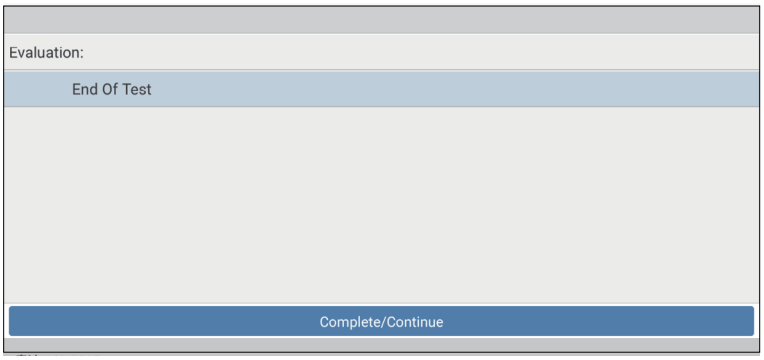

3.2 Calibrating the rear camera

This chapter describes a general operation procedure of rear camera calibration on **AUDI A4 USA/Canada 2016 (Model Year 2018)**.

3.2.1 Why to calibrate?

1). The following diagnostic trouble code is found on the vehicle:

- B201000 - Rear view system has not been calibrated.

2). The following repairs and replacements are made on the vehicle:

- The backup camera R189 has been removed and installed.
- The backup camera system control unit J772 has been replaced.
- After the accident repair has been done on the rear body or the trunk lid.
- After four-wheel alignment.
- After repair work has been made on the front or rear axle.

3.2.2 Operation Notes

Make sure the following conditions are met:

WorkStation Size

For calibrating the rear & AVM camera, the whole workstation size depends on the vehicle size and the calibration reference pattern. The following illustration describes the maximum workstation size for reference only.

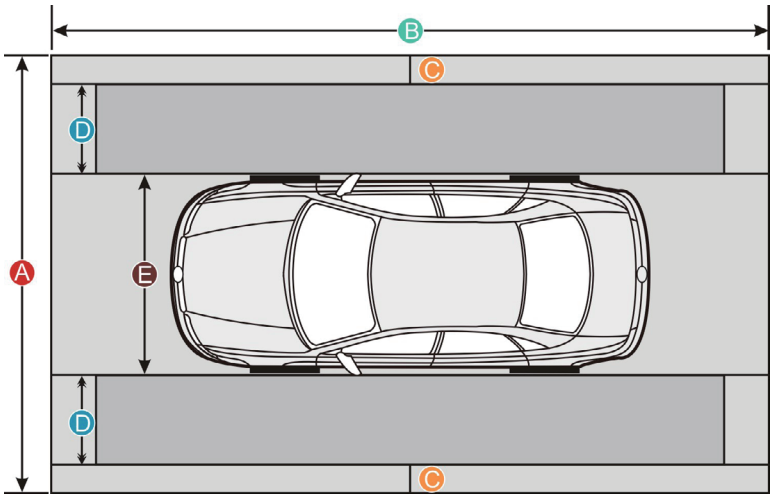

	American vehicles	European vehicles	Asian vehicles
Distance A (the width of the whole workstation)	about 7.3m	about 4.5m	about 6.1m
Distance B (the width of the whole workstation)	about 12m	about 7m	about 9.5m
Distance C (a lane for technician to walk through)	at least 0.5m	at least 0.5m	at least 0.5m
Distance D (the width of the calibration reference pattern. It varies from vehicle to vehicle)	about 1.7m	about 0.8m	about 1.6m
Distance E (the width of the vehicle, varies from vehicle to vehicle)	about 2.9m	about 1.9m	about 1.9m

On vehicle & diagnostic tool

- Use the AUDI diagnostic software version 28.50 or above to perform the calibration.
- Make sure that there should be no direct light reflecting on the calibration pattern. Reflecting light affects the image recognition of the camera and calibration failure becomes possible.
- Make sure that the VCI device has been plugged into the vehicle's DLC.
- Turn on the ignition.
- The backup camera has been activated (Backup camera image can be seen).
- The vehicle is in good condition and no one is allowed to sit in the vehicle.
- Fuel tank is full.
- Maintain the standard wheel pressure.

On calibration tool

- Use the LAC02-03 calibration pattern.

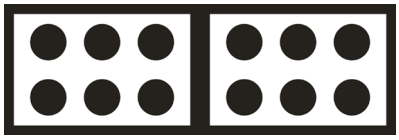

LAC02-03

- Ruler or tape measure is necessary.
- Calibration tool setting: The calibration pattern is parallel to the axis of the rear wheel of the vehicle and is centred. The distance from the edge of the LAC02-03 to the center of the rear wheel is 1500 ± 10 mm or 59.055 ± 0.394 inch. For Phaeton, it is 1700±10 mm or 66.929 ± 0.394 inch.

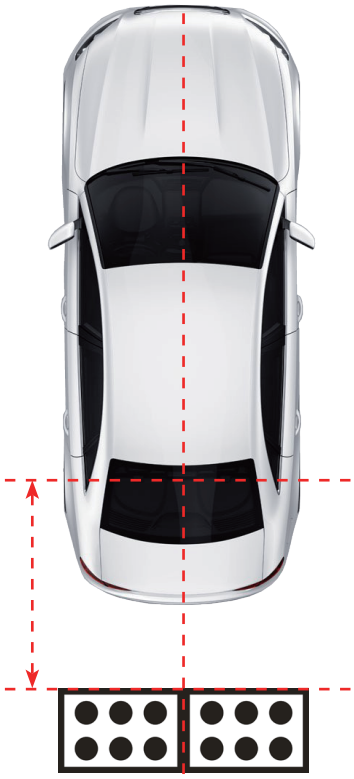

3.2.3 Start calibration

Follow the steps below to proceed:

1. Choose **AUDI** on the diagnostic software selection screen.

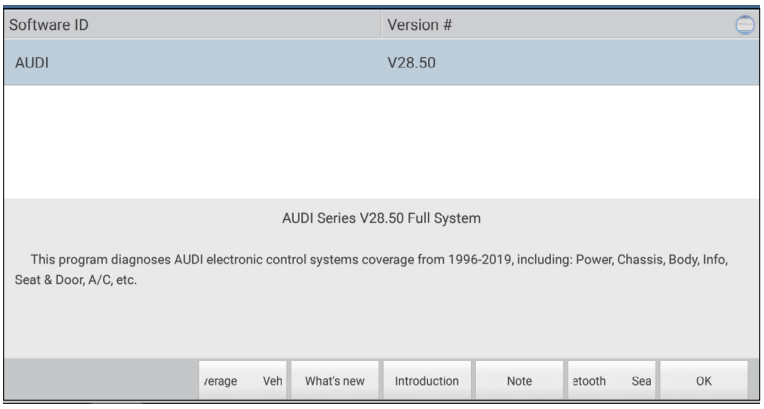

2. Tap **OK** to enter the following diagnostic menu screen.

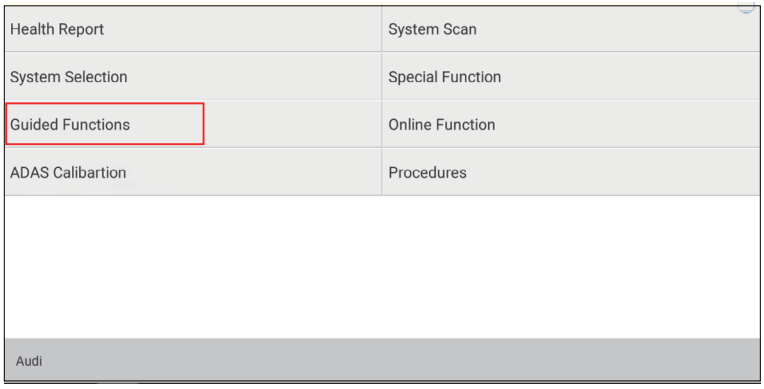

3. Choose **Guided Functions** to enter vehicle model selection screen.

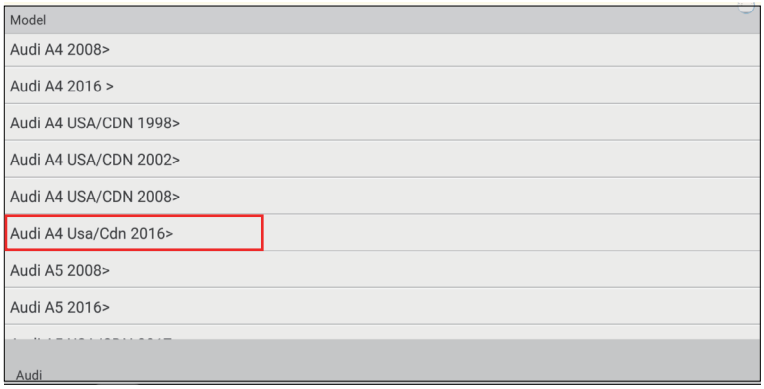

3. Select **Audi A4 Usa/Cdn 2016>**.

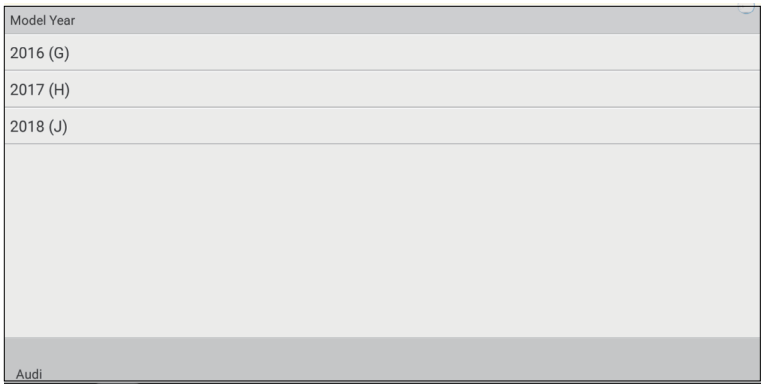

(Select **2018 (J)**)

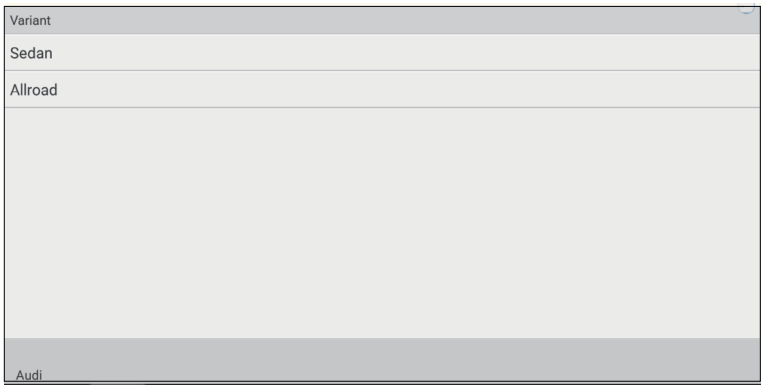

(Select **Sedan**)

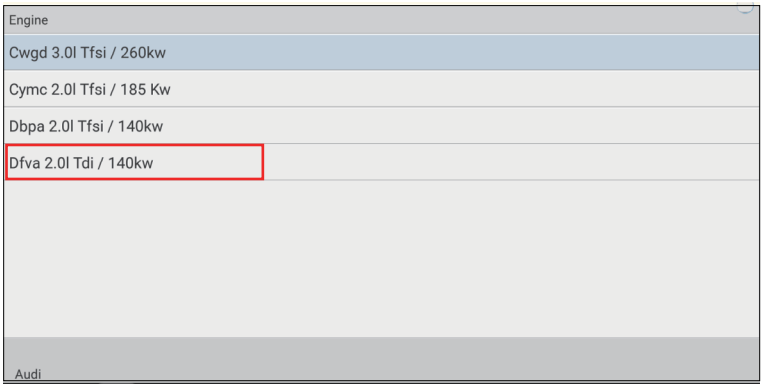

(Select Engine - **Dfva 2.0l/140kw**)

4. Double check your selections and tap **Confirm** to go to the next step.

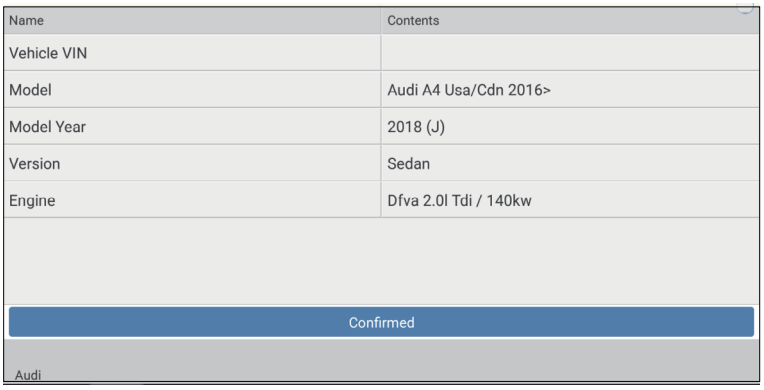

5. Select **System Selection** from the Guided functions list.

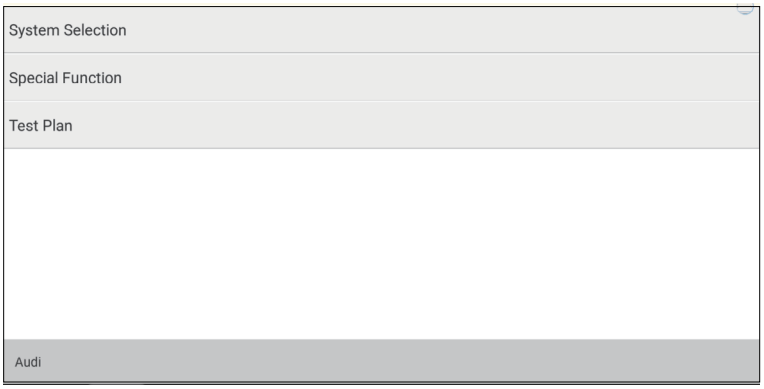

(Select **System Selection**)

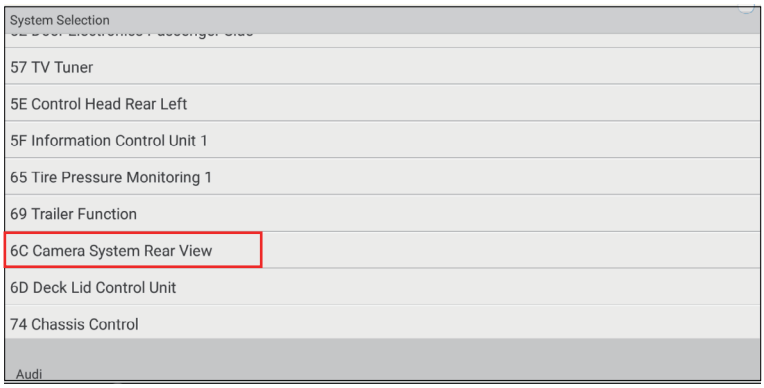

(Select **6C Camera System Rear View**)

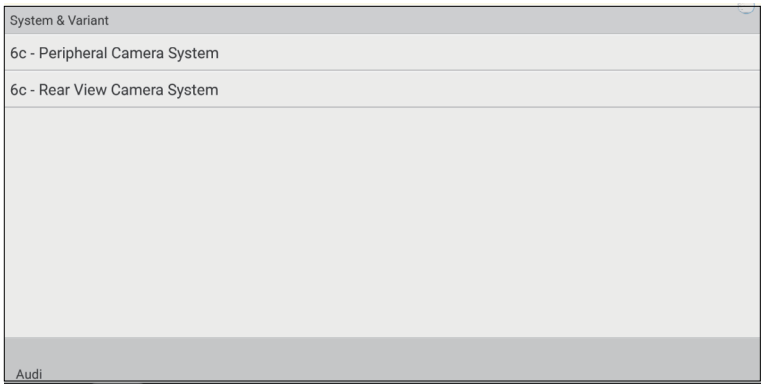

(Select **6c - Rear View Camera System**)

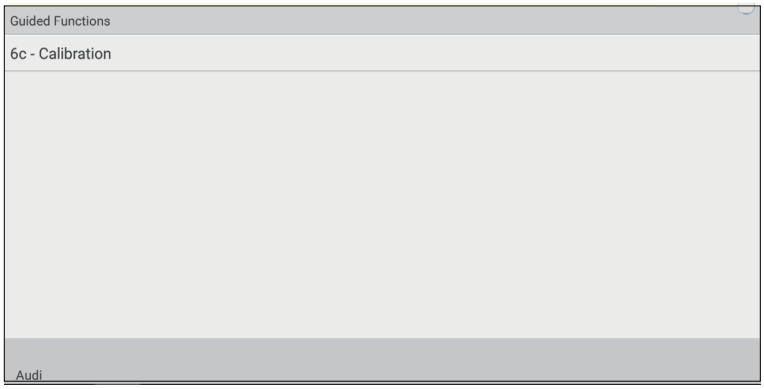

(Select **6c - Calibration**)

6. Swipe the screen from the bottom to scroll and carefully read all instructions and notes on calibration operation. Tap **Complete/Continue** to continue.

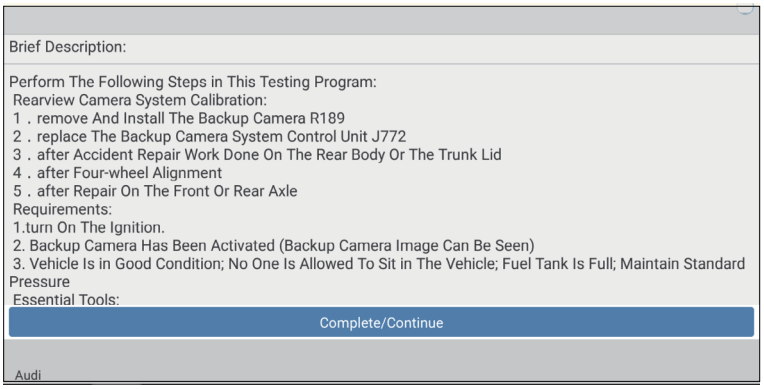

7. Input the measured height distance of the calibration pattern to the floor in millimeter (for example: 80), and tap **OK** to confirm.

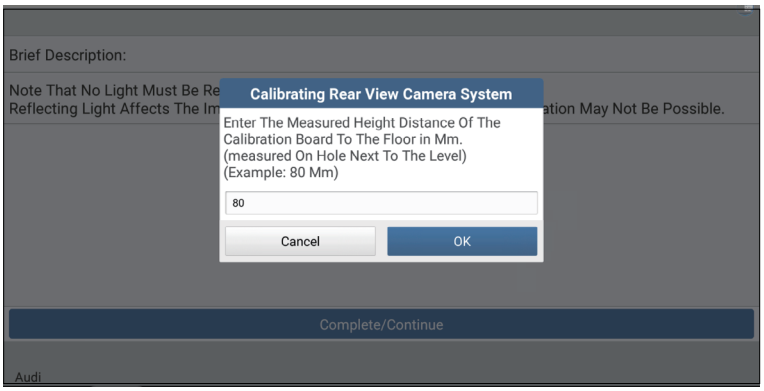

8. Input the measured distance of the calibration pattern to the rear axle in millimeter (for example: 1300), and tap **OK** to confirm.

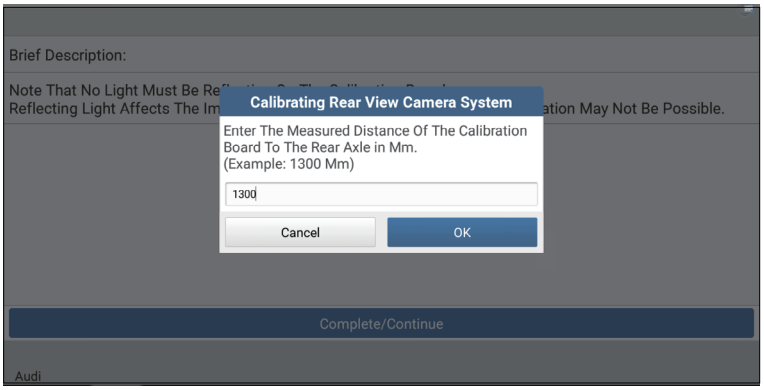

9. Double check whether it is a A4 long version or not. If yes, tap **Yes**.

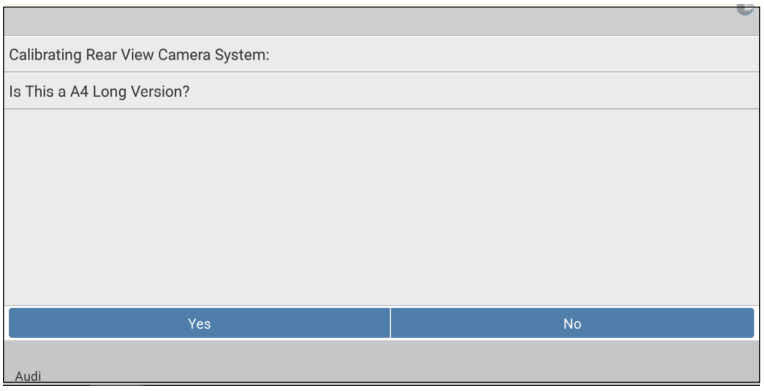

10. Enter the measured ground clearance of the camera lens perpendicular to the ground in millimeter (for

example: 865mm), and tap **OK** to confirm.

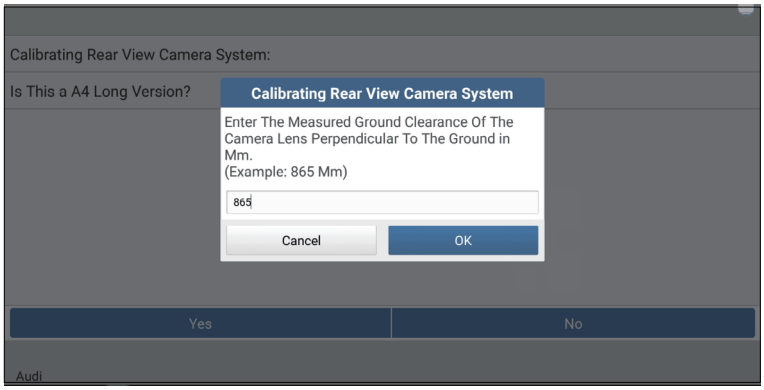

11. The rear view camera system starts calibrating. Follow the on-screen instructions until the calibration is successfully finished.

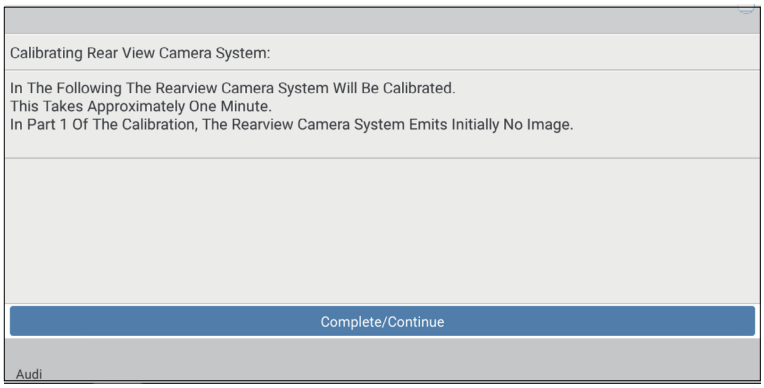

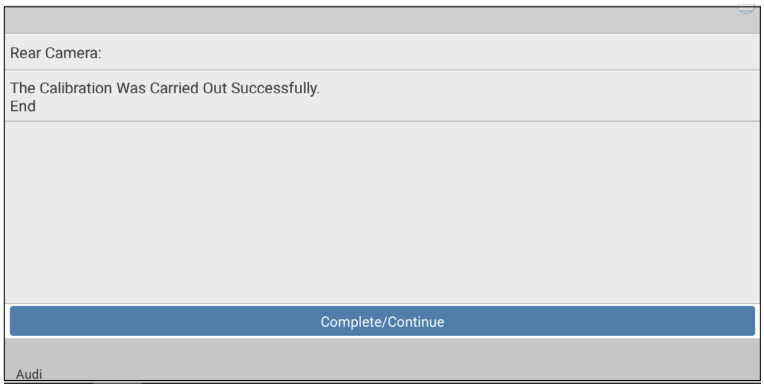

4 Target Pattern Kit (Optional)

Due to continuous development, more vehicle manufacturer-specific calibration panels will be individually available for the iSmartADAS Mobile, further extending its coverage.

Please check the packing list upon receiving your tool so that complaints can be issued immediately regarding potential damage or missing parts. For different destinations, the accessories may vary. Various calibration panel packages and kits are available individually or as a package to meet different workshop requirements. For details, please consult from the local dealers or check the included packing list.

1. REAR CAMERA & AVM PANELS KIT (ASIAN)

HONDA-AVM
(LAC04-01)

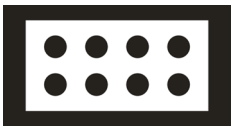

(LAC04-02)

NISSAN-AVM
(LAC04-11)

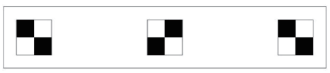

HYUNDAI-AVM
(LAC04-12-01) (LAC04-12-02)

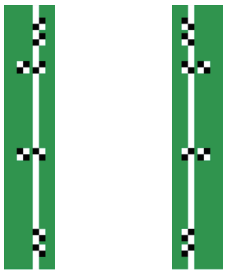

2. REAR CAMERA & AVM PANELS KIT (AMERICAN)

CADILAC-AVM
(LAC04-06)

FORD-AVM
(LAC04-07)

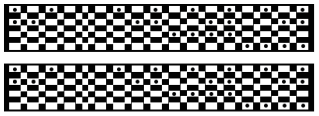

3. REAR CAMERA & AVM PANELS KIT (EUROPEAN)

MERCEDES-RC
(LAC02-02)

VW-RC
(LAC02-03)

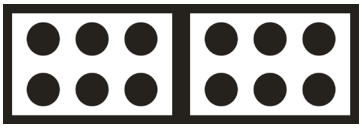

MERCEDES-RFK
(LAC04-08-01)

(LAC04-08-02)

RENAULT-AVM
(LAC04-10-01) (LAC04-10-02)

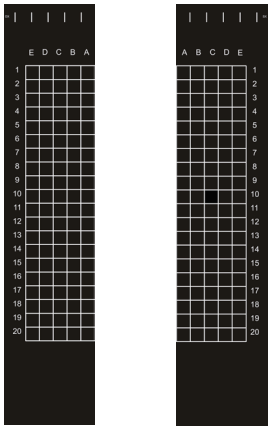

VW-AVM
(LAC04-04)

4. CORNER REFLECTOR KIT (LAC05-03)

5. MITSUBISHI AVM TARGET (LAC04-13)

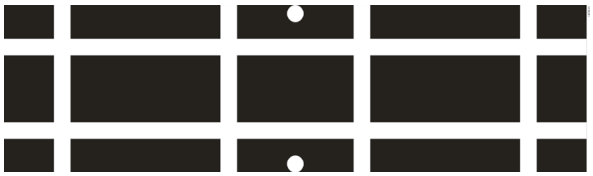

6. NISSAN AVM TARGET(LAC04-15)

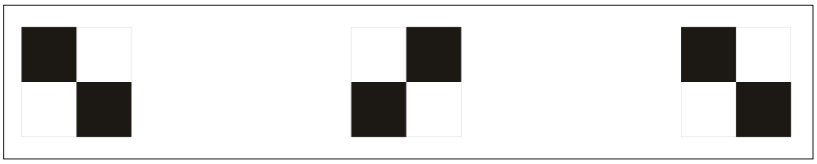

7. VW AVM TARGET(LAC04-14)

8. DOPPLER SIMULATOR(LAC05-04)

9. SUBARU LDW TARGET(LAM01-21)

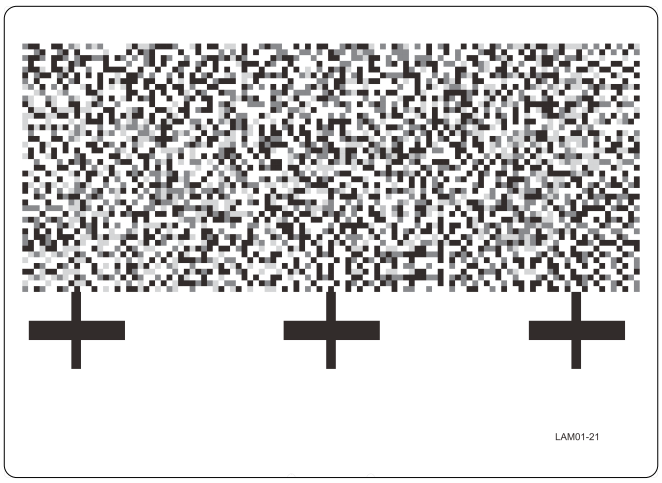

10. SPRINTER LDW TARGET(LAM01-23-L/R)

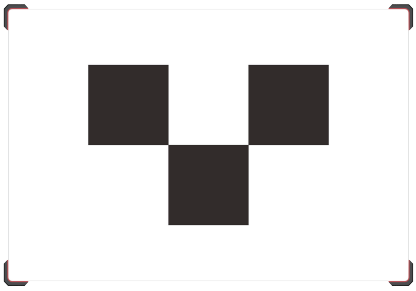

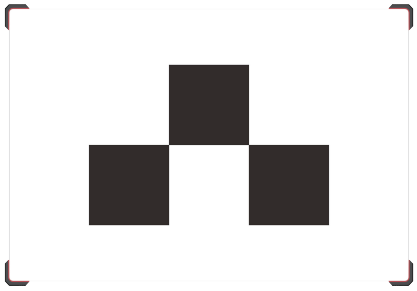

11. SUZUKI LDW TARGET(LAM01-25)

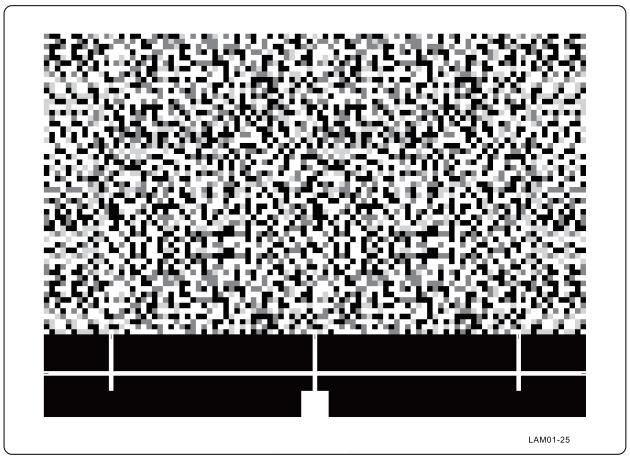

12. TOYOTA AVM TARGET(LAC04-16-1/2/3/4)

LAC04-16-1

LAC04-16-2

LAC04-16-3

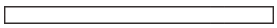

LAC04-16-4

13. HONDA LANE WATCH TARGET(LAC04-17)

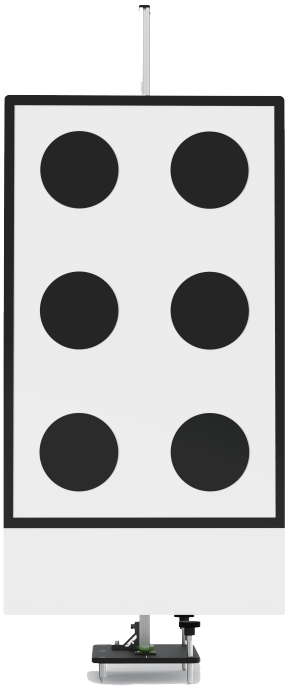

14. LYNK&CO AVW TARGET(LAC04-23)

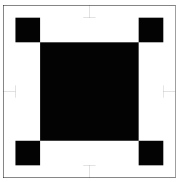

15. NISSAN RCW TARGET(LAC04-24)

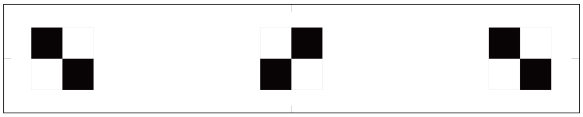

16. TOYOTA RCW TARGET(LAC04-25)

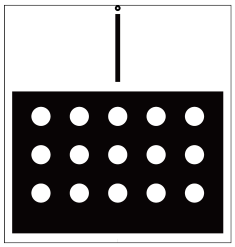

17. PORSCHE AVM TARGET(LAC04-05-1/2)

18. VW/AUDI LIDAR TARGET(LAC05-06)

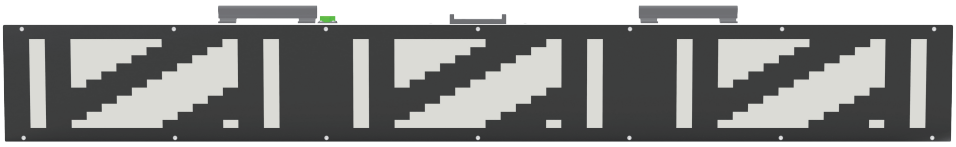

19. VW NVS CALIBRATOR(LAC06-01)

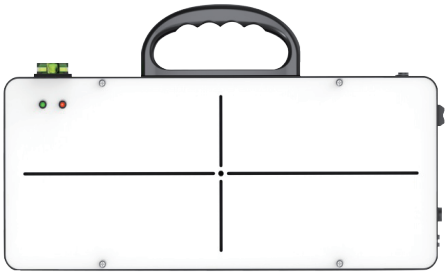

20. BENZ NVS CALIBRATOR(LAC06-02)

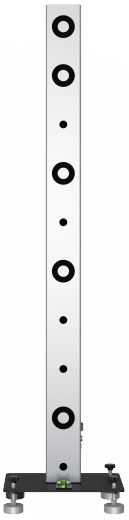

5 Care & Maintenance

- For every spare part, the calibration tool should also be handled with care.
- Keep the calibration tool clean at all times.
- Do not immerse the calibration tool in water or other fluids.
- Maintain the calibration tool in dry conditions and operate them within normal operating temperatures.
- Do not store the calibration tool in humid or dirty areas.
- Regularly lubricate moving parts with acid-free and resin-free grease or oil.
- Clean the ADAS calibration tool with non-aggressive cleaning agents on a regular basis.
- Use commercial household cleaning detergents and a moistened, soft cleaning cloth.
- Always use original spare parts to replace damaged accessories immediately.
- Always have the calibration tool serviced by authorized after-sales service center.

6 Warranty

THIS WARRANTY IS EXPRESSLY LIMITED TO PERSONS WHO PURCHASE SMARTSAFE PRODUCTS FOR PURPOSES OF RESALE OR USE IN THE ORDINARY COURSE OF THE BUYER'S BUSINESS.

SMARTSAFE electronic product is warranted against defects in materials and workmanship for one year from date of delivery to the user.

This warranty does not cover any part that has been abused, altered, used for a purpose other than for which it was intended, or used in a manner inconsistent with instructions regarding use. The exclusive remedy for any automotive meter found to be defective is repair or replacement, and SMARTSAFE shall not be liable for any consequential or incidental damages.

Final determination of defects shall be made by SMARTSAFE in accordance with procedures established by SMARTSAFE. No agent, employee, or representative of SMARTSAFE has any authority to bind SMARTSAFE to any affirmation, representation, or warranty concerning SMARTSAFE automotive meters, except as stated herein.

Disclaimer

The above warranty is in lieu of any other warranty, expressed or implied, including any warranty of merchantability or fitness for a particular purpose.

Purchase Order

Replaceable and optional parts can be ordered directly from your SMARTSAFE authorized tool supplier. Your order should include the following information:

- Order quantity
- Part number
- Part name

THANK YOU FOR CHOOSING SMARTSAFE!

If you have any questions or comments please contact:

SHENZHEN SMARTSAFE TECH CO.,LTD.

Addr: 3F, Building B, Qiao'an Technology Industrial Park, Guanlan, Longhua New District, Shenzhen

Zip: 518110

Tel: +86-755-89589810

http://www.newsmartsafe.com

Statement:

We reserve the rights to make any change to product designs and specifications without notice. The actual object may differ a little from the descriptions in the manual in physical appearance, color and configuration. We have tried our best to make the descriptions and illustrations in the manual as accurate as possible, and defects are inevitable, if you have any question, please contact local dealer or after-sale service center, we shall not bear any responsibility arising from misunderstandings.