1645 Lemonwood Dr.
Santa Paula, CA 93060 USA
Toll Free: (800) 253-2363
Tel: (805) 933-9970
bendpak.com

Multi-Level Parking Lift

Installation and Operation Manual

Manual P/N 5900076 — Manual Revision A — April 2019

Model:

- HD-973P

Designed and engineered by BendPak Inc. in Southern California, USA. Made in China.

DANGER

Read the *entire* contents of this manual ***before*** using this product. Failure to follow the instructions and safety precautions in this manual can result in serious injury or death. Make sure all other operators also read this manual. Keep the manual near the product for future reference. By proceeding with installation and operation, you agree that you fully understand the contents of this manual.

Manual. HD-973P Multi-Level Parking, *Installation and Operation Manual*, Manual P/N 5900076, Manual Revision A, Released April 2019.

Limitations. Every effort has been made to make sure complete and accurate instructions are included in this manual. However, product updates, revisions, and/or changes may have occurred since this manual was published. BendPak reserves the right to change any information in this manual without incurring any obligation for equipment previously or subsequently sold. BendPak is not responsible for typographical errors in this manual. You can always find the latest version of the **manual for your product on the BendPak website**.

Warranty. The BendPak warranty is more than a commitment to you: it is also a commitment to the value of your new product. Contact your nearest BendPak dealer or visit **www.bendpak.com/support/warranty** for full warranty details. Go to **bendpak.com/support/register-your-product/** and fill out the online form to register your product (be sure to click **Submit**).

Safety. Your product was designed and manufactured with safety in mind. However, your safety also depends on proper training and thoughtful operation. Do not install, operate, maintain, or repair the unit without reading and understanding this manual and the labels on the unit; ***do not use your Lift unless you can do so safely!***

Owner Responsibility. In order to maintain your product properly and to ensure everyone's safety, it is the responsibility of the product owner to read and follow these instructions:

- Follow all installation, operation, and maintenance instructions.
- Make sure product installation conforms to all applicable local, state, and federal codes, rules, and regulations, such as state and federal OSHA regulations and electrical codes.
- Read and follow all safety instructions; keep them readily available for operators.
- Make sure all operators are properly trained, know how to safely operate the unit, and are properly supervised.
- Do not operate the product until you are certain that all parts are in place and operating correctly.
- Carefully inspect the product on a regular basis and perform all maintenance as specified.
- Service and maintain the unit with approved replacement parts only.
- Keep instructions permanently with the product and make sure all labels are clean and visible.
- **Only use the Lift if it can be used safely!**

Unit Information. Enter the Model Number, Serial Number, and the Date of Manufacture from the label on your unit. This information is required for part or warranty issues.

Model: _____

Serial: _____

Date of Manufacture: _____

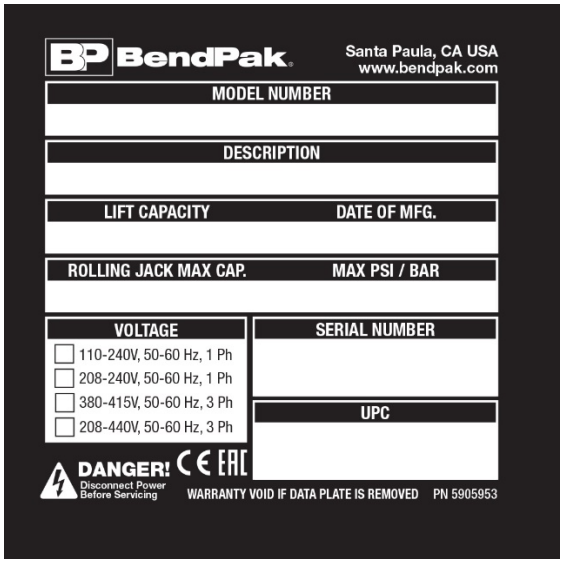

Table of Contents

Introduction

This manual describes the following BendPak Parking Lift:

- **HD-973P**: Multi-Level Parking Lift that can raise Vehicles up to 7,000 lbs (3,175 kg) on the Upper Platform and up to 9,000 lbs (4,082 kg) on the Lower Platform.

This manual is mandatory reading for all users of the HD-973P, including anyone who installs, uses, maintains, repairs, or wants to know more about them.

⚠ **DANGER** Use care when installing, operating, maintaining, or repairing this equipment; failure to do so could result in property damage, product damage, injury, or (in very rare cases) death. Make sure only authorized personnel operate this equipment. All repairs must be performed by an authorized technician. Do not make modifications to the unit; this voids the warranty and increases the chances of injury or property damage. Make sure to read and follow the instructions in this manual and on the labels on the unit.

Keep this manual on or near the equipment so that anyone who uses or services it can read it.

If you are having issues, refer to the **Troubleshooting** section of this manual for assistance.

Technical support and service is available from your dealer, on the Web at **bendpak.com/support**, by email at **techsupport@bendpak.com**, or by phone at **(800) 253-2363**, extension 196. You may also contact BendPak for parts replacement information at **(800) 253-2363**, extension 191; please have the model and serial number of your unit available.

Shipping Information

Your equipment was carefully checked before shipping. Nevertheless, you should thoroughly inspect the shipment ***before*** you sign to acknowledge that you received it.

When you sign a bill of lading, it tells the carrier that the items on the invoice were received in good condition. *To protect yourself, do not sign until **after** you have inspected the shipment.* If any of the items listed on the bill of lading are missing or are damaged, do not accept the shipment until the carrier makes a notation on the bill of lading that lists the missing and/or damaged goods.

If you discover missing or damaged goods ***after*** you receive the shipment and have signed the bill of lading, notify the carrier at once and request the carrier to make an inspection. If the carrier will not make an inspection, prepare a signed statement to the effect that you have notified the carrier (on a specific date) and that the carrier has failed to comply with your request.

It is difficult to collect for loss or damage after you have given the carrier a signed bill of lading. If this happens to you, file a claim with the carrier promptly. Support your claim with copies of the bill of lading, freight bill, invoice, and photographs, if available. ***Our willingness to assist in helping you process your claim does not make us responsible for collection of claims or replacement of lost or damaged materials.***

Safety Considerations

Read this entire manual carefully before installing or using the product. Do not install or operate the product until you are familiar with all operating instructions and warnings. Do not allow anyone else to operate it until they are familiar with all operating instructions and warnings. Keep this manual on or near the product for future reference.

Read and follow the warnings and instructions on the labels on the product. Contact BendPak at **(800) 253-2363** or **techsupport@bendpak.com** if you need replacement labels or a replacement manual.

Safety Information

The following safety information applies to the HD-973P:

- **The product is a Multi-Level Parking Lift**; this Lift may be different from other Parking Lifts you have installed or used. Use it only for its intended purpose.
- BendPak recommends referring to the ANSI/ALI ALIS Standard (R2015) *Safety Requirements for Installation and Service* for more information about safely installing, using, and servicing your Lift.
- The product may only be operated by authorized, trained persons.
- When the Lift is in use, keep all body parts well away from it.
- Do not make any modifications to the Lift; this voids the warranty and increases the chances of injury or property damage.
- Make sure all operators read and understand this *Installation and Operation Manual*. Keep the manual near the Lift at all times.
- Make an inspection of the Lift ***before*** using it. Check for damaged, worn, or missing parts. Do not use it if you find any of these issues. Instead, take it out of service, then contact an authorized repair facility, your dealer, or BendPak at **(800) 253-2363** or **techsupport@bendpak.com**.
- BendPak recommends making a ***thorough*** inspection of the product at least once a year. Replace any damaged or severely worn parts, decals, or warning labels.

Symbols

Following are the symbols used in this manual:

⚠ **DANGER**	Calls attention to an immediate hazard that **will** result in death or severe injury.
⚠ **WARNING**	Calls attention to a hazard or unsafe practice that **could** result in death or severe personal injury.
⚠ **CAUTION**	Calls attention to a hazard or unsafe practice that could result in minor personal injury, product damage, or property damage.
NOTICE	Calls attention to a situation that, if not avoided, could result in product or property damage.
Tip	Calls attention to information that can help you use your product better.

Liability Information

BendPak Inc. assumes **no** liability for damages resulting from:

- Use of the equipment for purposes other than those described in this manual.
- Modifications to the equipment without prior, written permission from BendPak.
- Damage to the equipment from external influences.
- Incorrect operation of the equipment.

Components

The main components of your Lift include:

- **Power Post**. The Post that holds the Power Unit. Mount the Power Unit on one of the two Mounting Brackets.
- **The other three Posts**. These Posts are interchangeable.
- **Power Unit**. An electric/hydraulic unit that connects to an electric power source and then provides Hydraulic Fluid to the Hydraulic Cylinder that raises and lowers the Runways.
- **Upper Platform**. Can hold Vehicles up to 7,000 lbs (3,175 kg).
- **Lower Platform**. Can hold Vehicles up to 9,000 lbs (4,082 kg).
- **Powerside Runways**. On the same side as the Power Post for the Upper and Lower Platform. The Powerside Runways have the Hydraulic Cylinder and the Cables under them.
- **Offside Runways**. The other Runways. They do not have a Hydraulic Cylinder or Cables under them.
- **Aluminum Decks**. Sits in between the two Runways. Protects any oil leakage from falling onto the Vehicle below. Two per Platform.
- **Safety Shutoff Bar**. Located on the underside of the Upper Platform. The Safety Shutoff Bar stops upward movement of the Lift. If you are raising a Vehicle on the Lower Platform and it hits the Safety Bar, the Lift immediately stops moving up.
- **Crosstubes**. Each Platform has one at each end of the Lift. The Crosstubes are hollow; the Cables that raise and lower the Runways are routed through the Crosstubes. The Crosstubes are *not* interchangeable: Each Crosstube has an opening (called a 'Window') that faces the inside. ***Windows open to the inside of the Lift only***. Cables go into the Crosstubes through the Windows.
- **Crossbeams**. Extra structural stability for your Lift. Two Crossbeams connect the Powerside Posts and another two connect the Offside Posts.
- **Drive-up Ramps**. The Upper Platform uses a longer set of Ramps, and the Lower Platform uses a shorter set of Ramps. Use them to drive onto and off of the Runways. Two per Platform.
- **Tire Stops**. Located at the Front of the Lift, Tire Stops prevent the Vehicle's front tires from going any further forward. Additionally, we strongly recommend chocking the Vehicle's rear tires. Two per Platform.
- **Safety Locks**. Once engaged, they hold the Runways in position, even if the power goes out or there is a leak in the Hydraulic Lines. Your Lift has two columns of Safety Locks per post, spaced every four inches. This lets you lock the Runways at just the right height for what you want to do. This Lift also has a backup Slack Safety system; refer to **About Safety Locks** for more information. ***Only leave your Lift on the ground or engaged on a Safety Lock.***
- **Platform Switch Valve**. Controls which Platform is in use; only one Platform can be raised or lowered at a time.
- **Pushbutton Air Valve**. Moves the Safety Locks away from the Ladder so that they do not engage as you lower the Lift. Used to lower the Runways.
- **Ladders**. Pieces of steel that gets installed at the back of each Post. The Upper Platform has 31 slots in it, the Lower Platform 13; these are part of the Safety Lock system.

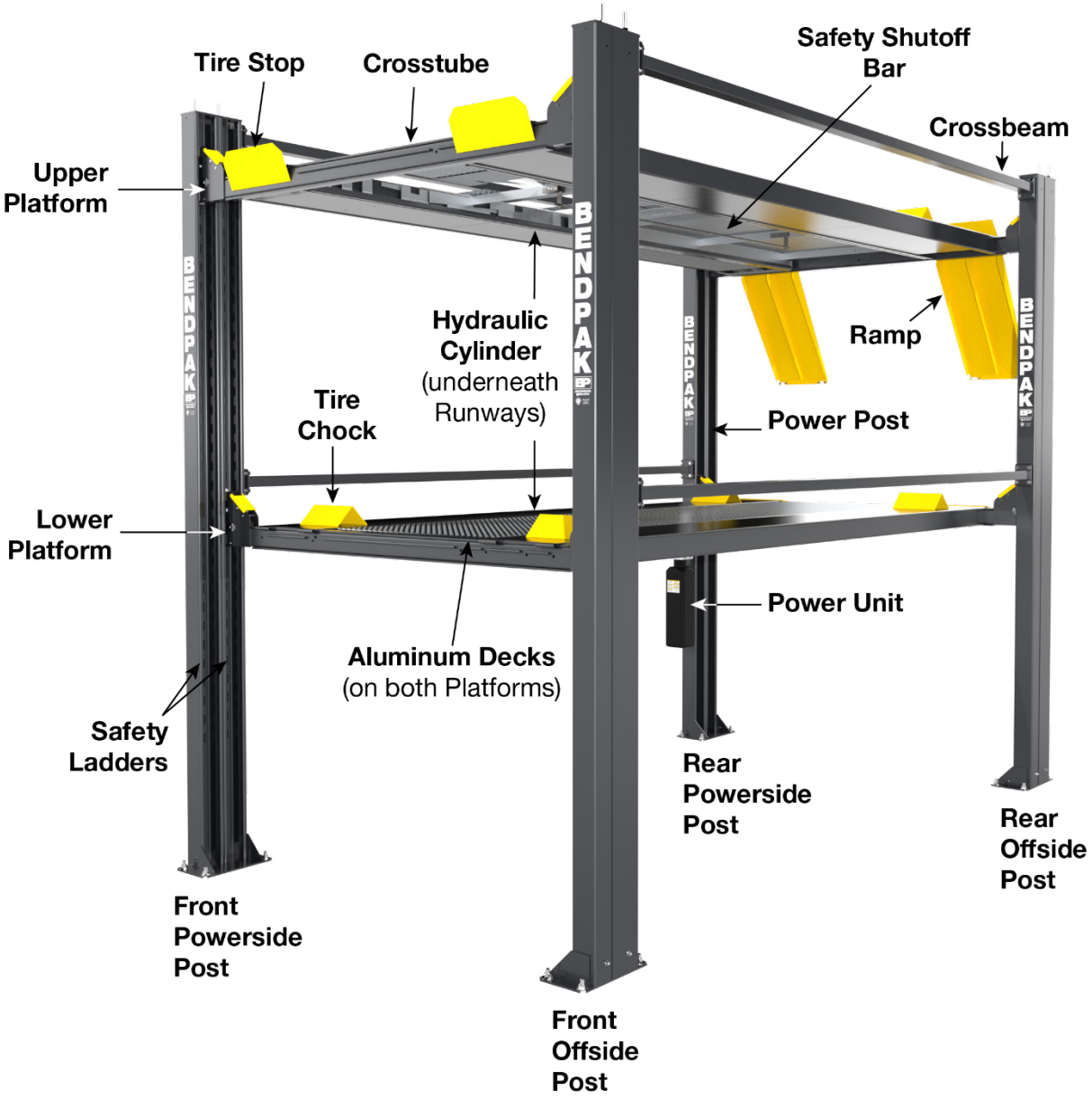

Drawing not necessarily to scale. Some components not shown. The Front of the Lift is the end ***opposite*** *the Drive-up Ramps.*

Specifications

Side View

Top View

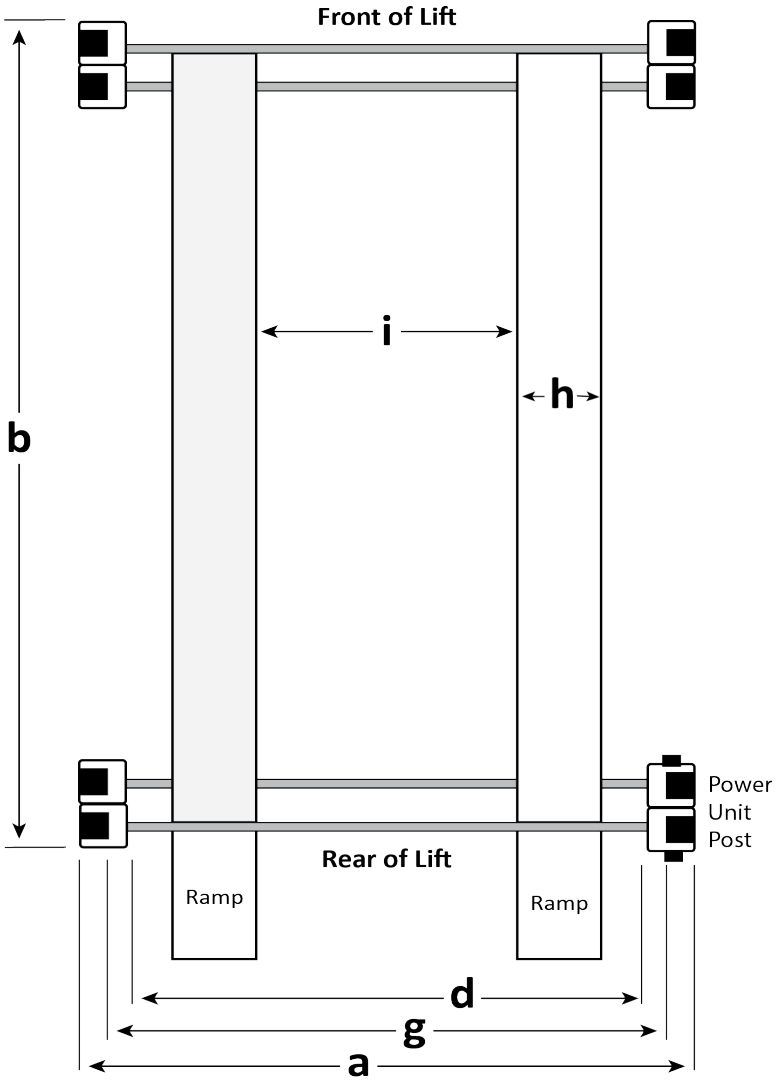

Not drawn to scale. Some components not shown or exaggerated for clarity. Drawing shows both Platforms lowered. This drawing shows the Drive-up Ramps separated from the Lift for clarity.

HD-973P	**Upper Platform**	**Lower Platform**
Lifting capacity	7,000 lbs / 3,175 kg	9,000 lbs / 4,082 kg
a Total width	112" (9.4 feet) / 2,843 mm	
b Outside length	198" (16.6 feet) / 5,028 mm	
c Height of post	161" (13.5 feet) / 4,093 mm	
d Drive-thru clearance	86.5" (7.3 feet) / 2,201 mm	
e Maximum rise	139" (11.7 feet) / 3,531 mm	69.5" (5.10 feet) / 1,765 mm
f Maximum lifting height	145"(12.1 feet) / 3,683 mm	74.5" (6.3 feet) / 1,892 mm
g Distance between posts	100" (8.4 feet) / 2,546 mm	
h Runway width	19" / 482 mm	
i Width between runways	44.5" (3.9 feet) / 1,130 mm	
j Runway length	188" (15.8 feet) / 4,788 mm	176" (14.8 feet) / 4,470 mm
k Drive-up ramps	Length: 48" / 1,220 mm Height: 5" / 128 mm	Length: 36" / 930 mm Height: 4" / 105 mm
l Height of Platform when lowered	10.75" / 270 mm	5" / 127 mm
Min. wheelbase @ rated capacity [1]	135 (11.3 feet) / 3,429 mm	125" (10.5 feet) / 3,175 mm
Min. wheelbase @ 75 capacity [1]	115" (9.7 feet) / 2,921 mm	105" (8.9 feet) / 2,667 mm
Min. wheelbase @ 50 capacity [1]	95" (7.11 feet) / 2,413 mm	85" (7.1 feet) / 2,159 mm
Min. wheelbase @ 25 capacity [1]	80" (6.8 feet) / 2,032 mm	70" (5.10 feet) / 1,778 mm
Locking positions	31 Spaced every 4" / 102 mm	13 Spaced every 4" / 102 mm
Lifting time	90 seconds	50 seconds
Motor	220 VAC, 60 Hz, 1 Ph (*special voltages available upon request*)	

[1] The Lift supports less weight than its rated capacity if the vehicle's wheelbase is shorter because the wheels of such a vehicle are closer to the middle of the Runways, where there is less strength.

Specifications subject to change without notice.

Frequently Asked Questions

Question: What kinds of Vehicles can I put on my Parking Lift?

Answer: Cars, trucks, SUVs; anything that fits on the Upper Platform, up to 7,000 lbs (3,175 kg). The Lower Platform holds up to 9,000 lbs (4,082 kg).

Q: How are the two Platforms different?

A: Some of the main differences between the two Platforms include the weight capacity, maximum lifting height, and Runway length. Additionally, the Upper Platform has a Microswitch that prevents the roof of a vehicle on the Lower Platform from contacting the Upper Platform.

Q: Can any of the four Posts be the 'Power Post'?

A: No; the only two possible locations for the Power Post are either the *Front Driver-Side* or the *Rear Passenger-Side*. This will be explained later.

Q: Does the Lift have to be anchored in place?

A: Yes; you ***must*** anchor your Lift.

Q: Can I use my Lift to hold storage boxes instead of a Vehicle?

A: No. This is not the intended use of the Lift; do not use it this way.

Q: How high does the ceiling have to be?

A: It depends on the height of the Vehicles you are putting on the Runways and how high you raise the Runways. If you are going to put a tall Vehicle on the Lift and raise it all the way up, you should check to make sure there is enough room.

Q: Does it matter if I drive my Vehicles in front first or back them in?

A: We strongly recommend driving your vehicle in front first, because that makes it easier to center the vehicle's wheels on the Runways. Also, remember to put the front wheels up against the Tire Stops and chock the rear wheels.

Q: Will the Cables really hold my Vehicles?

A: Yes. Your Lift has 4/10 inch thick, aircraft-quality ***wire rope*** that runs through oversized sheaves, reducing friction on them and extending their life with minimal maintenance.

Q: How many Safety Locks does my Lift have?

A: The Upper Platform has 31 Safety Locks for you to use; the Lower Platform has 13.

Q: How long can I leave a Vehicle on a raised Runway?

A: As long as you want; once the Lift is engaged on a Safety Lock, gravity holds it in position, so a loss of power does not impact it; it is going to stay where you left it. Always leave the Platforms either fully lowered or engaged on a Safety Lock.

Q: Can I install my Lift outside?

A: Your Lift is approved for indoor installation and use only. ***Outdoor installation is prohibited***.

Q: How long does it take to raise the Platforms?

A: The Upper Platform takes about 90 seconds; the Lower Platform takes about 50 seconds.

Installation Checklist

Following are the steps needed to install your Lift. Perform them in the order shown.

- ☐ 1. Review the installation safety rules.
- ☐ 2. Make sure you have the necessary tools.
- ☐ 3. Plan for electrical work.
- ☐ 4. Select the installation location.
- ☐ 5. Unload and unpack the Lift components.
- ☐ 6. Decide the Lift Orientation.
- ☐ 7. Create Chalk Line Guides.
- ☐ 8. Move the Posts into position.
- ☐ 9. Install the Crosstubes.
- ☐ 10. Install the Ladders.
- ☐ 11. Raise the Crosstubes.
- ☐ 12. Secure the Ladders.
- ☐ 13. Install the Runways.
- ☐ 14. Route the Cables.
- ☐ 15. Install the Return Lines.
- ☐ 16. Install the Air Lines.
- ☐ 17. Install the Hydraulic Lines.
- ☐ 18. Install the Safety Shutoff Bar and the Microswitch.
- ☐ 19. Install the Power Unit.
- ☐ 20. Install the Flex Tube Bracket Plate and Angle Plate.
- ☐ 21. Install the Flex Tubes.
- ☐ 22. Install the Pushbutton Air Valve and connect the Air Lines.
- ☐ 23. Connect the Return Lines.
- ☐ 24. Install the Platform Switch Valve and connect the Hydraulic Lines.
- ☐ 25. Contact the Electrician.
- ☐ 26. Connect to a power source (Electrician required).
- ☐ 27. Connect the Microswitch (Electrician required).
- ☐ 28. Install the Power Disconnect Switch (Electrician required).
- ☐ 29. Install the Thermal Disconnect Switch (Electrician required).
- ☐ 30. Anchor the Posts.
- ☐ 31. Perform final leveling.
- ☐ 32. Install the Accessories.
- ☐ 33. Install the Crossbeams.
- ☐ 34. Lubricate the Lift.
- ☐ 35. Bleed the Hydraulic Cylinder.
- ☐ 36. Test the Lift.
- ☐ 37. Review the final checklist.
- ☐ 38. Leave the manual for the owner/operator.

Installation

The installation process takes multiple steps. Perform them in the order listed. ***Read the entire Installation section before beginning the install***; this gives you a better understanding of the process as a whole.

⚠ **WARNING** ***Only use the factory-supplied parts that came with your Lift***. If you use parts from a different source, you void your warranty and compromise the safety of everyone who installs or uses the Lift. If you are missing parts, visit **bendpak.com/support** or call **(800) 253-2363**, extension 191.

Safety Rules

While installing this equipment, your safety depends on proper training and thoughtful operation.

⚠ **WARNING** Do not install this equipment unless you have automotive Lift installation training. Always use proper lifting tools, such as a Forklift or Shop Crane, to move heavy components. Do not install this equipment without reading and understanding this manual and the safety labels on the unit.

Only fully trained personnel should be involved in installing this equipment. Pay attention at all times. Use appropriate tools and lifting equipment. Stay clear of moving parts.

BendPak recommends referring to the ANSI/ALI ALIS Standard (R2015) *Safety Requirements for Installation and Service* for more information about safely installing, using, and servicing your Lift.

⚠ **WARNING** You must wear appropriate protective equipment ***at all times***: gloves, steel-toed work boots, eye protection, back belts, and hearing protection.

Using Tools

You may need some or all of the following tools:

- Rotary hammer drill or similar
- ¾ inch carbide bit (conforming to ANSI B212.15-1994)
- Hammer and crow bar
- Four-foot level
- Open-end wrench set, SAE and metric
- Socket and ratchet set, SAE and metric
- Hex key wrench set
- Medium crescent wrench, torque wrench, pipe wrench
- Chalk line
- Medium-sized flat screwdriver and needle-nose pliers
- Tape measure (25 feet or above)
- Forklift, shop crane, or heavy-duty rolling dolly, and two sawhorses
- 12-foot ladder

Planning for Electrical Work

You will need to have a licensed, certified Electrician available at some point in the installation.

⚠ **DANGER** All wiring ***must*** be performed by a licensed, certified Electrician.

Notify your Electrician in advance so that they come prepared with an appropriate Power Cord with a Plug for connecting to the power source, a Power Disconnect Switch, and a Thermal Disconnect Switch. Refer to **Contacting the Electrician** for more information.

Your Electrician needs to:

- **Connect the Power Unit to a power source**. Replace the 'Pigtail' that comes with your Power Unit with the appropriate Power Cord and Plug.
- **Install a Microswitch**. Shuts off electric power in the event that a Vehicle on the Lower Platform comes too close to hitting the underside of the Upper Platform. Goes on the underside of the Aluminum Decks on the Upper Platform. UL Cable included.
- **Install a Power Disconnect Switch**. Ensures you can quickly and completely interrupt electrical power to the Lift in the event of an electrical circuit fault, emergency situation, or when equipment is undergoing service or maintenance. Put it within sight and reach of the Lift operator.
- **Install a Thermal Disconnect Switch**. Ensures the equipment shuts down in the event of an overload or an overheated motor.

Selecting a Location

When selecting the location for your Lift, consider:

- **Architectural plans**. Consult the architectural plans for your desired installation location. Make sure there are no issues between what you want to do and what the plans show.
- **Available space**. Make sure there is enough space for the Lift: front, back, sides, and above. Refer to **Specifications** for measurements.
- **Overhead Clearance**. Check for overhead obstructions such as building supports, heaters, electrical lines, low ceilings, hanging lights, and so on. ***You do not want the Vehicles on the Lift hitting obstructions***. There's a formula for figuring out how much height you need, based on the Vehicles you want to park on the Upper Platform:

  Height of Vehicle on the Upper Platform + 7 inches + height of Safety Locks

  Add these together; your location height needs to be higher than the sum of these values.

  The 7 inch figure includes the height of the Upper Platform plus the height needed to raise the Lift off of the Safety Locks. Note this figure is a rough estimate, for calculation purposes only.

Tip To find the "height of Safety Lock", raise the Platform and lock it on its Safety Lock position, then measure from the ground to the bottom of the raised Platform. Note that the maximum rise height listed in **Specifications** is how high the mechanism can go before stopping; the Safety Locks height is not the same as maximum rise.

- **Side Clearances**. You must leave room around the Lift. Leave at least three feet (36 inches) clear on the side of the Lift.
- **Front and Rear clearances**. You must leave room around the Lift. Leave at least two feet (24 inches) clear on the Front of the Lift, and no obstructions at all at the Rear of the Lift so you can safely drive Vehicles onto the Runways.
- **Power**. You need a 220 VAC power source available for the Power Unit.

- **Outdoor installations**. Your Lift is approved for indoor installation and use only. Outdoor installation is prohibited.
- **Floor**. Only install the Lift on a flat, concrete floor; do not install on asphalt or any other surface. The surface must be level; do not install if the surface has more than 3°degrees of slope.

⚠ **WARNING** Installing your Lift on a surface with more than 3° of slope could lead to injury or even death; only install the Lift on a level floor. If your floor is not level, consider making the floor level or using a different location.

- **Shimming**. If your concrete floor is not completely level, you can use Shims under the bases of the Posts, as needed, to level the Lift.

  To estimate your Shim requirements, use a transit level and targets to check for flatness. Use the provided Shims as necessary.

NOTICE Do not shim a Post more than half an inch using the provided Shims and Anchor Bolts. A maximum shim of 2 inches is possible by ordering optional Shim Plates. Contact BendPak at **(800) 253-2363**, extension 191 to order. Please have the model and serial number of your Lift available.

- **Concrete specifications**. Do not install the Lift on cracked or defective concrete. Make sure the concrete is at least 6 inches thick, 3,000 PSI, and cured for a minimum of 28 days.

⚠ **CAUTION** BendPak lifts are supplied with installation instructions and concrete anchors that meet the criteria set by the American National Standard "Automotive Lifts – Safety Requirements for Construction, Testing, and Validation", ANSI/ALI ALCTV-2011. You are responsible for any special regional structural and/or seismic anchoring requirements specified by any other agencies and/or codes such as the Uniform Building Code (UBC) and/or International Building Code (IBC).

Be sure to check your floor for the possibility of it being a ***post-tension slab***. In this case, you must contact the building architect before drilling. Using ground penetrating radar may help you find the tensioned steel.

⚠ **WARNING** Cutting through a tensioned cable can result in injury or death. Do not drill into a post-tension slab unless the building architect confirms you are not going to hit tensioned steel or you have located it using ground penetrating radar. ***If colored sheath comes up during drilling, stop drilling immediately***.

Selecting the Lift Orientation

Before going any further, decide how you want to orient your Lift. This decision affects where you will place your Power Post and also the positioning of the Runways, which are ***not*** interchangeable.

On each level, one Runway has the Hydraulic Cylinder underneath it and is the starting point for the Lifting Cables. The other Runway, called the Offside Runway, does not have anything underneath it. The Runway with the Hydraulic Cylinder is the Powerside Runway and ***must*** be installed next to the Power Post (which holds the Power Unit).

You can choose to position your Power Post at either the ***Front Driver-Side*** or the ***Rear Passenger-Side***, as shown below.

Important: Installers, you need to have the Lift owner make this decision no later than when moving the Posts into position.

The drawings in this manual show the Power Post at the ***Rear Passenger-Side***, but that does not mean you have to. In many cases, the main factor is the location of the power source; many customers prefer to place their Power Post (which holds the Power Unit), near the power source. If power is not an issue, choose the option below that best fits your setup.

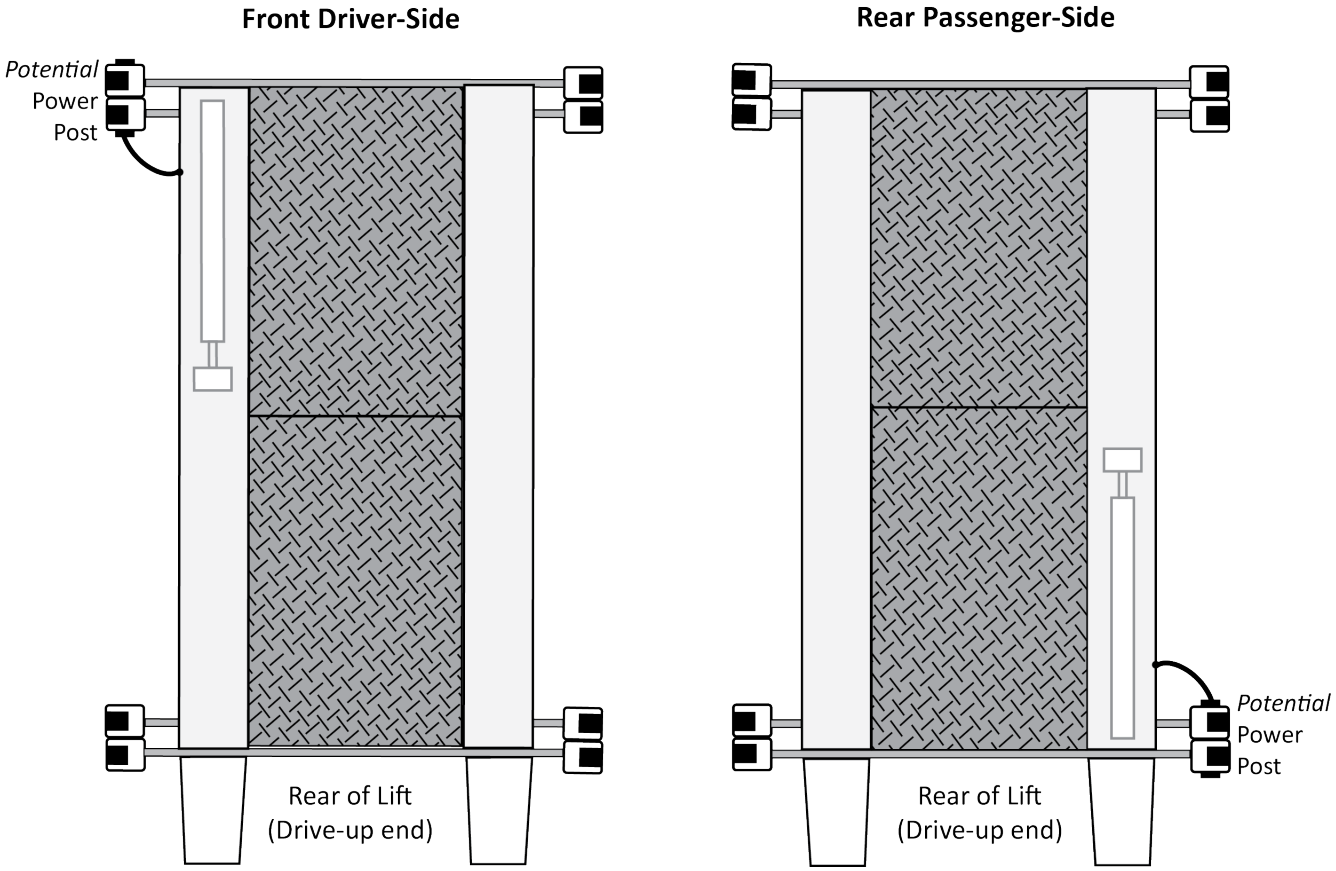

Drawing not to scale. Not all components are shown. Hydraulic Cylinder is underneath the Runway. Top View.

Creating Chalk Line Guides

Use Chalk Line Guides to ensure that your Posts get installed correctly.

Create the Chalk Line Guides so that the outside edges of all four Posts fit into the four corners created by the Chalk Line Guides.

Refer to **Specifications** to determine the **Total Width** and **Outside Posts Length** values for your Lift.

Note: Do ***not*** use the Total Length value; this includes the Ramps, which are not taken into consideration for creating Chalk Line Guides.

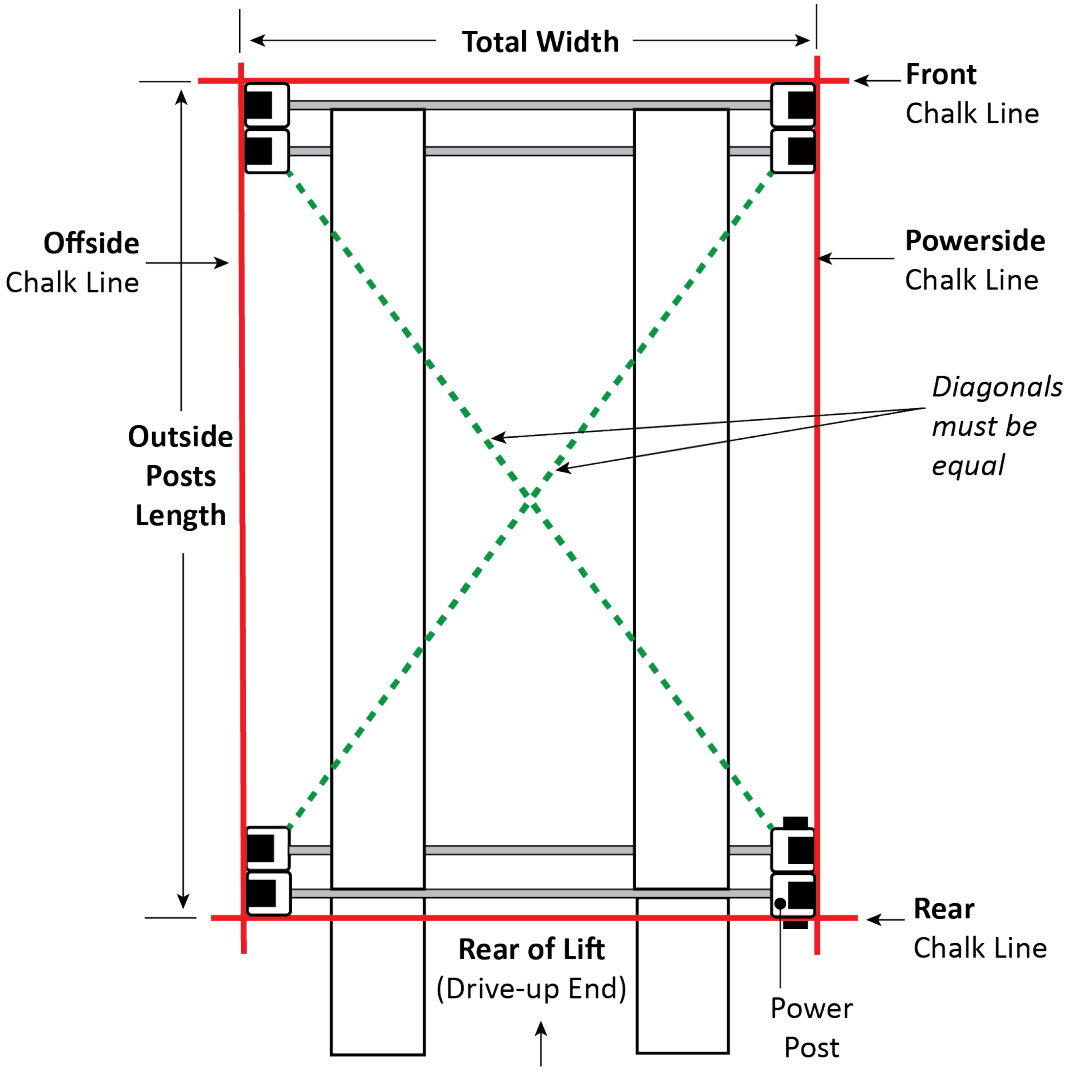

Not drawn to scale. Not all components shown. Top View.

To create Chalk Line Guides:

1. Create the Front Chalk Line where you want the Front of the Lift.

   Make the Front Chalk Line *longer* than the Total Width setting for your Lift.

2. Create the Powerside and Offside Chalk Lines at 90° angles to the Front Chalk Line and parallel to each other. Make the Powerside and Offside Chalk Lines longer than the Outside Posts Length setting for your Lift model.

   The Powerside and Offside Chalk Lines must be parallel to each other.

3. Create the Rear Chalk Line parallel to the Front Chalk Line. Make the Rear Chalk Line longer than the Total Width setting for your Lift model.

   The Front and Rear Chalk Lines must also be parallel to each other.

4. Before moving the Posts into position, measure ***diagonally*** to make sure the two diagonal measurements are the same. This ensures your layout is correct.

   Do not forget to check the diagonals.

5. When you move the Posts into position, put the corners of the Base Plates inside the corners created by the four chalk lines.

Unloading and Unpacking

Once the components are unloaded, they are your responsibility to move around. As the Lift includes a number of heavy pieces, the closer you unload them to the installation location, the better off you are.

⚠ **CAUTION** Some Lift components are very heavy; if handled incorrectly, they can damage materials like tile, sandstone, and brick. Try to handle the Lift components twice: once when delivered and once when moved into position. You must have a Forklift or Shop Crane to move them into position. Use care when moving them.

⚠ **WARNING** The Posts and Runways are delivered with stabilizing structures on each end. Be very careful when removing these stabilizing structures; the Posts and Runways can shift or even fall. If they fall on a person, they could cause serious injury.

Moving the Posts into Position

BendPak strongly recommends using a Forklift or Shop Crane to move the Posts.

1. Move the four Posts, one at time, to the inside corners of the Chalk Line Guides.

Important: Position the Power Post at your chosen location. Remember, the Power Post can only go in two possible locations: the ***Front Driver-side*** or the ***Rear Passenger-side***. Refer to **Lift Orientation** for more about the possible Power Post locations.

2. Stand up each Post. Have at least two people work together to stand up a Post.

CAUTION Use Caution when walking around the Posts; they are not anchored down at this point, so it is possible to knock them over, which could cause injury.

3. Use a Transit Level to estimate the Shim requirements: use a target to find the difference in height between the Posts. The difference is the estimated amount of Shim thickness you will need.

   Do not use Shims and/or Anchor Bolt to Shim more than 1/2 an inch. You can order 2 inch Shim Plates for extreme cases.

   Do not anchor the Posts at this point.

Installing the Crosstubes

Your Lift has a total of four Crosstubes, two per Platform:

Upper Platform:

- **Front Crosstube**: Has the Large Window, which includes two *medium* Twin Cable Sheaves. Located in the Front of the Lift, with the Window facing the inside.
- **Rear Crosstube**: Has the Small Window, which includes two Cable Sheaves and Hydraulic Cylinder. Located in the Rear of the Lift, with the Window facing the inside.

Lower Platform:

- **Front Crosstube**: Has the Large Window, which includes two Twin Cable Sheaves. Located at the Front of the Lift, with the Window facing the inside.
- **Rear Crosstube**: Has the Small Window, which includes two Cable Sheaves and Hydraulic Cylinder. Located at the Rear of the Lift, with the Window facing the inside.

The following drawing shows both Crosstubes for each Platform.

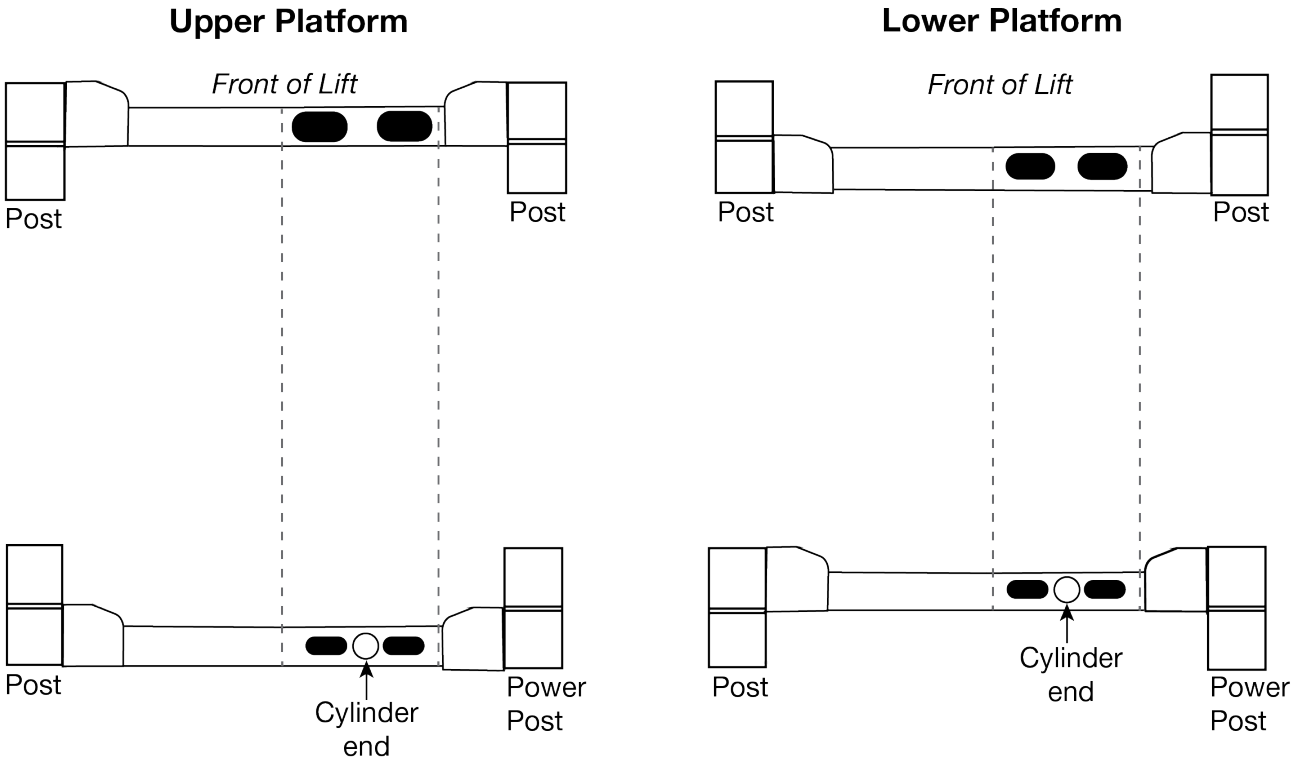

Not drawn to scale. Components not shown. The Crosstubes for the Upper Platform go in the outer slots of the Posts, and the Crosstubes for the Lower Platform go in the inner slots.

To install the Crosstubes:

1. Decide which Platform you want to start with, then find the Crosstubes that go with that Platform.
2. Lay the Posts down, then slide the Crosstubes in their ***required*** locations in each Post.

   Make sure that the Sheave Windows are on the same side as the Powerside Post, facing the inside of the Lift.

About Safety Locks

Safety Locks hold the Runways in place. Once engaged, Safety Locks hold the Runways in place, even if the power goes out or the Hydraulic Lines break or leak. The Upper Platform has 31 Safety Locks and the Lower Platform has 13, spaced every four inches.

Important: Simply raising the Runways does not necessarily engage them on the Safety Locks. You must back the Runways down onto the Safety Locks to engage them.

⚠ **WARNING** Safety Locks are dependent on correct installation of the 'Ladders'. Pay careful attention when installing the Ladders, thus ensuring correct operation of the Safety Locks on your Lift.

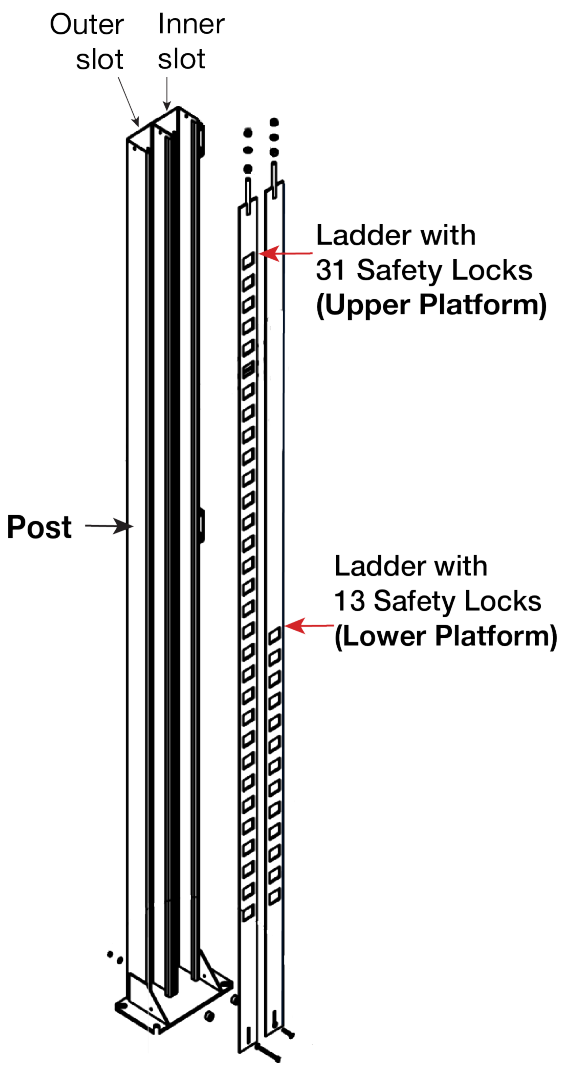

The Ladders, two per Post, are steel pieces with holes spaced every four inches. As you raise the Runways, the Safety Locks move into the holes in the Ladder. When you move the Runways back down a little after passing a Safety Lock, the Safety Lock engages. Once they are engaged, Safety Locks stay engaged until you are ready to lower the Runways.

⚠ **WARNING** Always leave the Runways either fully lowered or engaged on their Safety Locks. When you engage the Safety Locks at a desired height, check to make sure that all four Safety Locks for that Platform are engaged.

So how do the Runways come down if the Safety Locks are engaged? To lower the Runways, you raise them a few inches (to get them off the Safety Locks), then *press and hold down* the pushbutton on the Pushbutton Air Valve. While you hold down the pushbutton, the Safety Locks are moved away from the Ladders; they cannot engage, which allows the Runways to be lowered.

Out of an abundance of caution, your Lift has a second, independent Safety Lock system called the Slack Safety. In total, your Lift has two Safety systems:

- **Safety Locks**: The primary system to hold up the Runways on your Lift are the Safety Locks. When you move the Runways up, you can hear clicks as the Safety Locks go into the holes in the Ladders. When you want to keep the Runways at a certain height, you go slightly past the height you want, then back the Safety Locks down in to the holes in the Ladders, which engages them.
- **Slack Safety**: The Slack Safeties are next to the Safety Locks on the ends of the Crosstube Gussets. They are different from the Safety Locks in that when the Cables are taut (which they are during normal operation), they hold the Slack Safeties away from the Ladder so that the Slack Safeties cannot engage. However, if a Cable were to break (which very rarely happens), the Slack Safety for the broken Cable immediately engages, preventing the Runways from falling.

Installing the Ladders and Top Cap

Each Post has 2 Ladders, each gets installed on the inside back of a Post; Ladders are secured at the top and the bottom. It is important to note that these Ladders are ***not*** interchangeable and must go in the correct slots. The four Ladders with 31 holes go in the outer slots (Upper Platform) of the Post, and the other four Ladders with 13 holes go to the inner slots (Lower Platform).

The Top Caps secure the Ladder at the top of each Post and hold the ends of the Cables.

Note: It is much easier to secure the bottom of the Ladders once the Crosstubes have been raised, so that portion of installing the Ladders is described in **Securing the Ladders**.

⚠ **WARNING** Make sure to install the Ladders correctly. If they are not installed correctly, the Safety Locks on your Lift may not hold the weight of a vehicle, putting anyone under the Platform in danger.

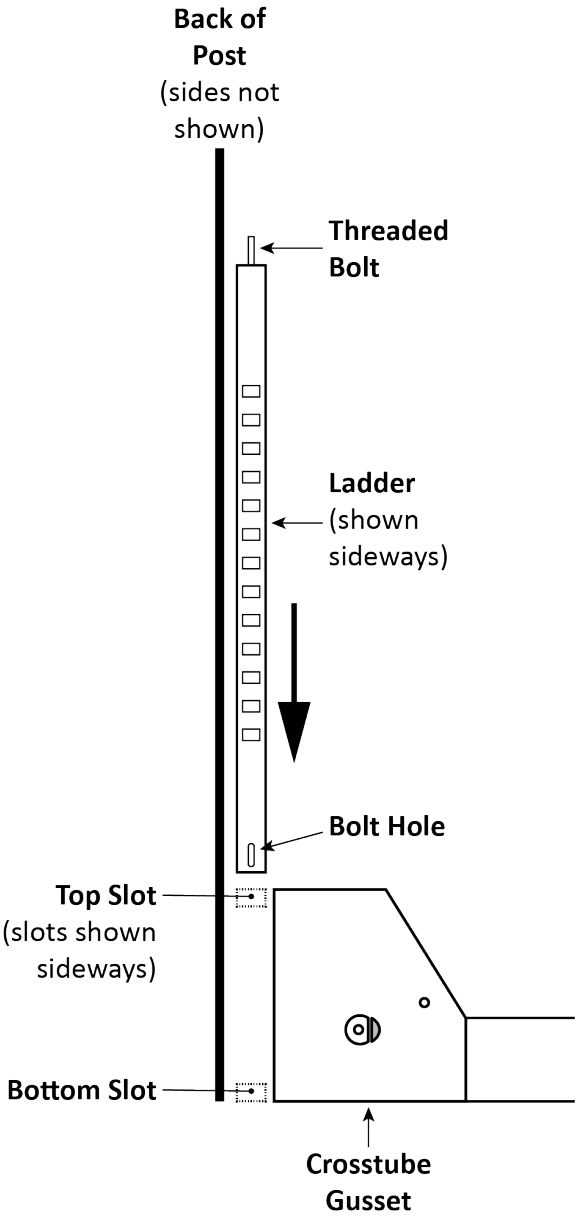

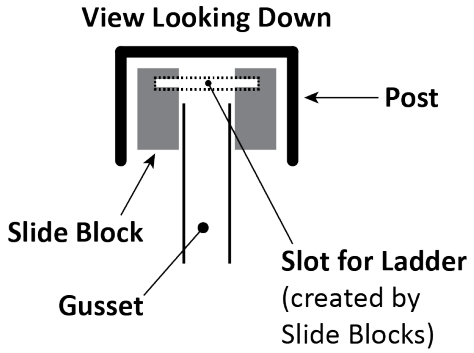

Notes: Slots are created by the Slide Blocks on the Crosstube Gusset.

Ladders go down and through **two** Slots, top ***and*** bottom.

Front and side views combined in this drawing.

Drawing not to scale. Not all components shown.

To install the Ladders and the Top Caps:

1. Take a Ladder and slide it down the back of the Post, Bolt Hole end at the bottom; see the drawing on the previous page.

   Make sure the Ladder goes through both Slots on each Gusset. There is a Slot at the top of the Gusset and another Slot at the bottom of the Gusset, formed by the Slide Blocks.

⚠ **WARNING** Make sure that all eight Ladders go through both Slots on their Gussets. If the Ladders are not installed correctly, the Safety Locks on your Lift may not hold the weight of a Vehicle. If the Vehicle were to fall, it could cause significant injury to anyone underneath it.

2. Install the remaining Ladders the same way.
3. For each Ladder, put a Stop Nut on the Threaded Bolt at the top; move it half of the way down towards the top of the Ladder.

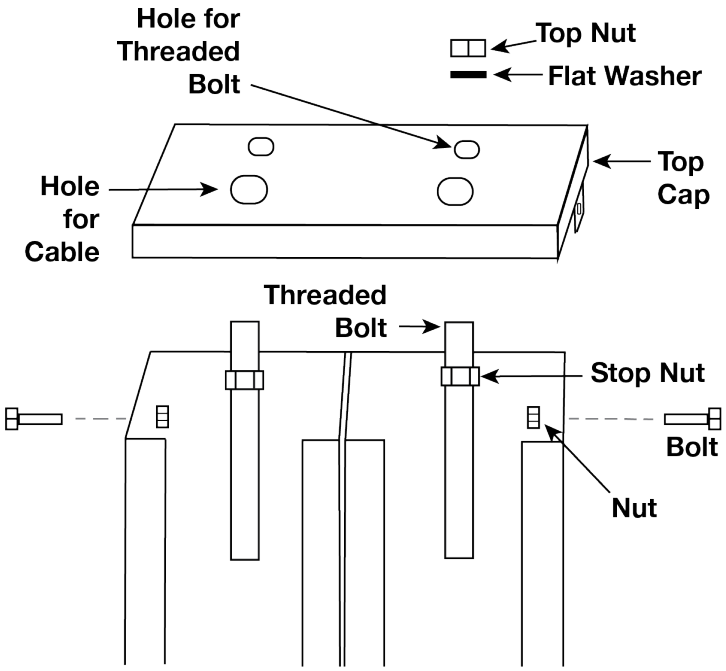

Not drawn to scale. Not all components shown. Ladders not shown.

4. Put the Top Cap onto the top of the Post, securing it on the sides with one Hex Head Bolt and one Nyloc Nut on each side of the Top Cap.
5. Once the Top Cap is secure, move the Stop Nut up until it contacts the underside of the Top Cap, then add a Flat Washer and Nyloc Nut to the top of the Top Cap and tighten it. Only hand tighten at this point. You are looking for about an inch of thread above the top of the Top Nut.

   Note: The other hole in the Top Cap is for the Cable that is routed to the top of the Post, which is done later in the installation.

6. Install the remaining Top Caps the same way.

Raising the Crosstubes

You need to manually raise the Crosstubes for each Platform, which makes it easier to complete the rest of the installation tasks. The front and rear Crosstubes need to be raised the same height, to the same Safety Lock. For example, if the Front Crosstube of the Upper Platform is raised to the sixth Safety Lock, then the Rear Crosstube for the Upper Platform also needs to be placed on the sixth Lock.

To raise the Crosstubes:

1. Using a Forklift or Shop Crane, carefully raise each Crosstube.

   You want to raise the Crosstubes for the Upper Platform at least two feet higher than the Lower Platform, to have enough room to work under it, making it easier to route the Cables and Lines.

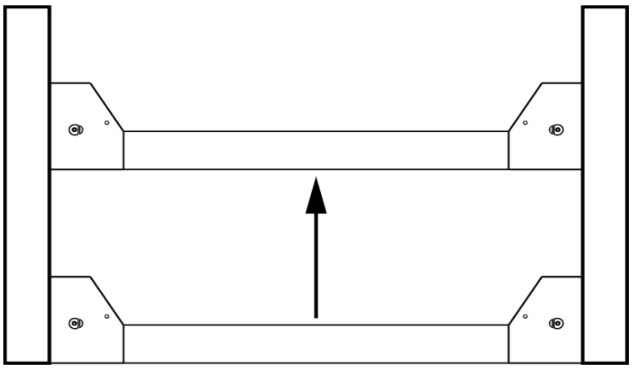

Important: The Slack Safeties cannot be engaged as you continue with the installation. Because the Cables are not in place yet, the Slack Safeties are going to engage when you manually raise the Crosstubes. You need to disengage them after you have raised the Crosstubes. The Primary Safeties are not impacted; they will engage normally when you manually raise each Crosstube, which is what you want.

2. To disengage the Slack Safeties after raising a Crosstube, press the Sheave and/or the Steel Piece (they are connected and will move together) back towards the Ladder and the back of the Post.

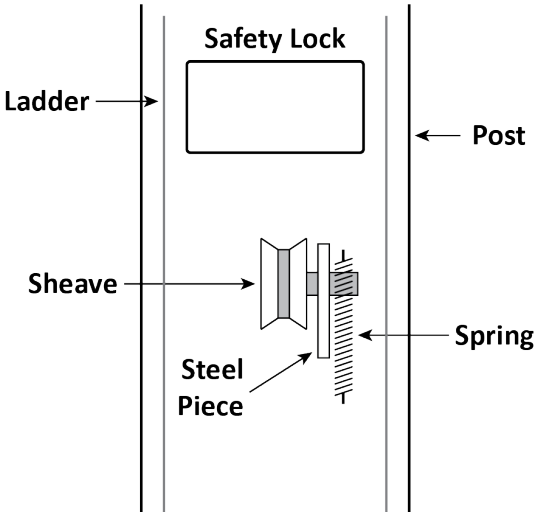

3. Once both Crosstubes are in position, ***all Primary Safeties are engaged***, and the Slack Safeties have been disengaged, you can continue with the installation.
4. Repeat steps 1-3 for the other Platform.

Securing the Ladders

Because it is much easier to secure the Ladders at the bottom of each Post ***after*** the Crosstubes have been raised, that procedure is described here.

Note: The Upper Platform has an additional component to secure. The Upper Platform uses Stop Blocks near the bottom of the Ladders; the Stop Blocks keep the Upper Platform from touching the Lower Platform when fully lowered, preventing the Safety Shutoff Bar and the Microswitch (underside of Upper Aluminum Decks) from being damaged.

The following procedure assumes that the Ladders are in place and secured at the top. If this is not the case, return to **Installing the Ladders**.

To secure the Ladders:

1. Locate a Bolt, Washer, Spacer, second Washer, and Nut.

   Use M10 x 1.5 x 45 mm Bolts for the Lower Platform; use M10 x 1.5 x 100mm Bolts for the Upper Platform.

2. If you are working on the Upper Platform, locate the four Stop Blocks.

   The following drawing shows how to secure the Ladders on the **Lower Platform**.

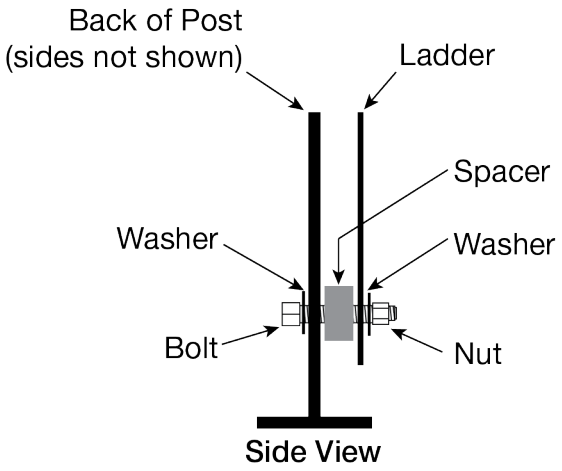

   The following drawing shows how to secure the Ladders on the **Upper Platform**.

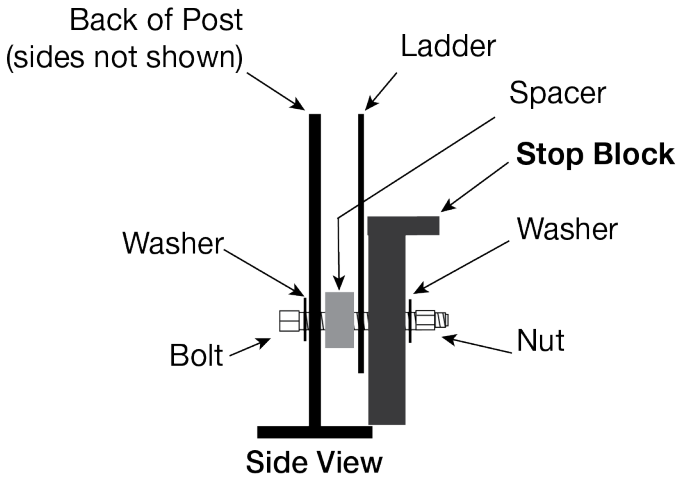

3. Put a Washer next to the Bolt head, then insert the Bolt through the hole in the back of the Post.

   Double check that the Ladders for the Upper Platform go to the outer Slots of the Post.

4. Put the Spacer into position between the Ladder and the back of the Post, push the Bolt through the Spacer, and then through the inside of the Post.

   For the Upper Platform, push the Bolt through the Spacer, Ladder, Stop Block, then through the inside of the Post.

5. Take the second Washer and the Nut and install them on the end of the Bolt; secure the Nut.

6. Perform the same procedure to secure the remaining Ladders on the Lift.

   Note: Do not securely tighten the Top Nut at the top of the Top Cap at this point. The Top Nut and the Stop Nut will be used later to make sure the Lift is level. They can be securely tightened after you do the final leveling of the Lift; refer to **Final Leveling** for additional information.

⚠ **WARNING** Make sure that all eight Ladders are correctly installed and secured. If the Ladder misses a Slot, your Safety Locks will ***not*** function correctly, which is a danger to anyone under a Platform that is holding a vehicle or around it.

Installing the Runways

Your multi-level Lift has two sets of Runways. Each Platform has a:

- **Powerside Runway**: Holds the Platform's Hydraulic Cylinder underneath it. Has a hole on the outside Rear that lets you route the Hydraulic Line, Air Lines, and Return Line, (also a Microswitch for the Upper Platform only) to the Power Unit. Cable routing starts under the Powerside Runway.
- **Offside Runway**: The Offside Runway does not have a Hydraulic Cylinder under it, nor are there any Cables under it.

Orient the two Runways this way:

- Utility Rails on the inside.
- The Powerside Runways are on the same side as the Power Post.

You can double check this by:

- Looking under the Runways. Only the Powerside Runways have a Hydraulic Cylinder underneath.
- Finding the ~1.5-inch wide hole in the side of the Powerside Runways at the Power Post for the two Flex Tubes (which holds the Air, Return, and Hydraulic Lines).

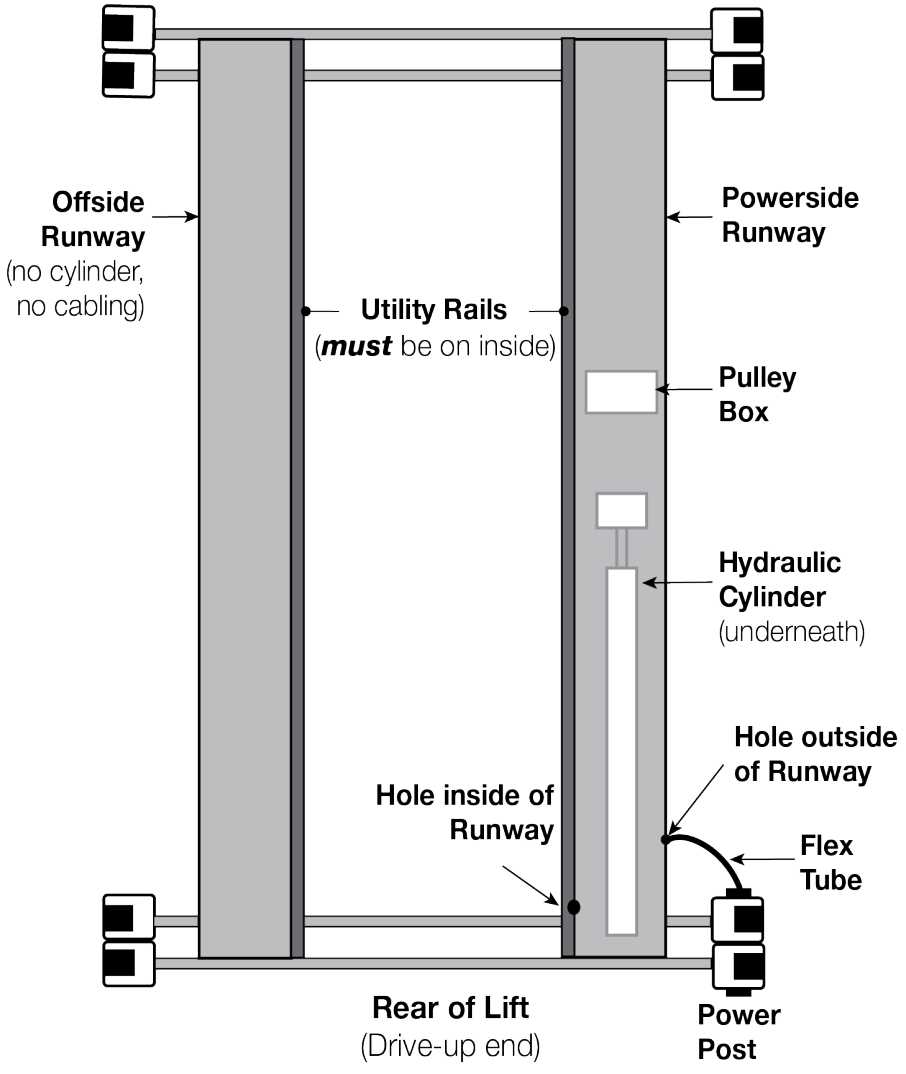

Not drawn to scale. Not all components shown.

Cable Sheaves are located on the underside of the Powerside Runways.

The Pulley Box and the opening for routing the Microswitch cable are for the Upper Platform only.

Use a Forklift or Shop Crane to raise the Runways and move them into position.

⚠ **WARNING** Pay close attention when moving the Runways into position; they are very heavy and very long, and could shift position or fall, potentially causing serious injury.

To install the Runways:

We recommend to install the Lower Platform first and then continue with the Upper Platform.

1. Correctly orient the Powerside Runway and the Offside Runway.

   See the previous page for more information.

2. On the Powerside Runway, remove the Cable Sheaves.

   (To remove the Cable Sheaves: pull out the Sheave Pins, then remove the Cable Sheaves).

   For the Upper Platform, also remove the Cable Sheaves inside the Pulley Box.

Note: Keep all of the components nearby, you will be putting them back in shortly.

3. When the Cable Sheaves have been removed, use a Forklift or Shop Crane to pick up the Powerside Runway and move it into place on the Powerside of the Lift.

   Make sure the Utility Rail is on the inside.

4. Bolt the Powerside Runway into place, two Bolts on each end going into the Crosstubes.

   Use four M12 by 1.75 by 90 Hex Head Bolts.

5. Using a Forklift or Shop Crane, pick up the Offside Runway and move it into place.

   Make sure the Utility Rail is on the inside.

6. Bolt the Offside Runway into place, two Bolts on each end going into the Crosstubes.

   Use four more M12 by 1.75 by 90 Hex Head Bolts.

7. Check all of the Safety Locks to make sure they are engaged.

   You do not want anyone going under the Runways unless the Safety Locks are engaged.

8. Repeat steps 1-7 for the Upper Platform.

Important: When removing the Cable Sheaves, make sure to not mix up the components for each Platform; keep the components nearby, but separate. If the components are replaced in the wrong locations, you could risk product damage or personal injury to anyone near the Lift.

⚠ **WARNING** Do not continue with the installation until you have visually confirmed that all four Safety Locks are engaged on each Platform. If they are not engaged, the Runways could move or fall, possibly causing personal injury or product damage.

Routing the Cables

Before routing the Cables on your Lift, you need to know the following:

- Each Platform has four Cables. All Cables have varying lengths and can only make one connection.
- All Cables have a Button end and a Threaded end. The Threaded end has a label on it that identifies the Lift model the Cable is designed for (and ***must*** be used with), the part number (if you need to replace it), and its length (in millimeters).

Button end.
Attaches at
Tie Plate or
Anchor Plate

Threaded end.
Attaches at
top of Post

- The Threaded end of each Cable goes to its paired Sheave (or Sheaves) and then gets routed to a Post; there are two kinds of Sheaves: Cable Sheaves and Gusset Sheaves.
- Cable Sheaves come installed but must be removed prior to putting the Runways in place. They are put into place as you route each Cable.
- Gusset Sheaves come installed and do not need to be removed. Just use them where they are.
- Each Platform has a set of *twin* Cable Sheaves (also inside the Pulley Box for the Upper Platform) at the Front of the Lift, meaning two Cable Sheaves have been stacked and molded together into one unit.
- Due to the twin Cable Sheaves, both Cables that go on it are put into place around the same time; example: Cables A and C are routed around the same time because they share a twin Cable Sheave, and same for Cables B and D.
- Each Crosstube Gusset has a Cable Lock Pin underneath the Gusset Sheave. Each Cable Lock Pin needs to be removed when routing the Cable to its Post. Reinstall the Cable Lock Pin once the Cable is in place.

  The Cable Lock Pin prevents the Cable from coming out later; there is not enough space between the bottom of the Gusset Sheave and the Cable Lock Pin for the Cable to slip out.

- In the following drawings, the Cables and Cable Sheaves are labeled A, B, C, and D. These letters are ***not*** on the label on the Threaded end. You have to match the Cable letter with the length information.

  The Cable Sheave letters apply to the set of twin Cable Sheaves at the Front of the Lift. There are also two Cable Sheaves at the Rear of the Lift; they are associated with Cables C and D. ***Cable Sheaves A and B at the Rear of the Lift do not exist***.

- The four Cables for the **Upper Platform** are:
  - **A**: **5,704** mm / 19 feet / 224.5 inches
  - **B**: **7,301** mm / 24 feet / 287.5 inches
  - **C**: **10,484** mm / 34.5 feet / 412.75 inches
  - **D**: **12,072** mm / 39 feet / 472.25 inches
- The four Cables for the **Lower Platform** are:
  - **A**: **5,050** mm / 17 feet / 199 inches
  - **B**: **6,670** mm / 21 feet / 262.75 inches
  - **C**: **9,492** mm / 31 feet / 373.75 inches
  - **D**: **11,104** mm / 36.5 feet / 437 inches

Before routing your Cables, make sure the Piston of the Hydraulic Cylinder has been extended, which is part of the procedure described in **Installing the Return Line**.

If the Piston has ***not*** been extended, you will need to do that before routing the Cables: remove the Elbow Compression Fitting from the Return Line Connector, extend the Piston using air pressure or a pulling device, then reinstall the Elbow Compression Fitting.

Note: There are separate procedures for routing each Cable.

The following drawing shows the routing for all four Cables on the **Upper Platform**.

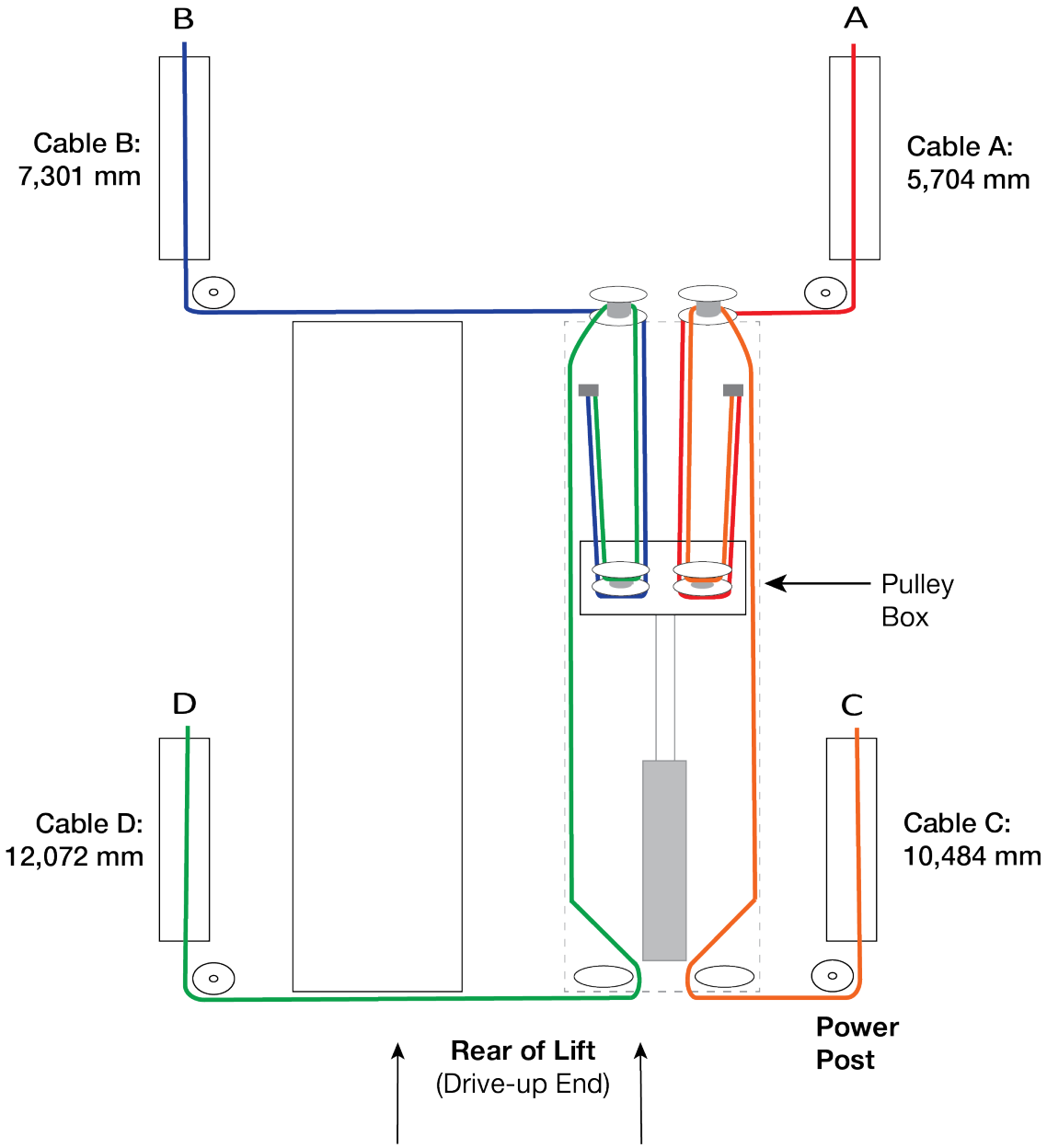

Drawing not to scale. Some components not shown or exaggerated for clarity. Top view.

Routing the Cables on the Upper Platform

The Upper Platform uses two Cable Anchor Plates along the front of the Powerside Runway (underneath) to hold the Button ends of the Cables. The Anchor Plates hold the Button ends snug against the sides of the Runway in order to be out of the way for the rest of the Cables to be routed around the appropriate Sheaves and then to their designated Posts.

All four Cables start at their designated Cable Anchor Plate, go around a Cable Sheave in the Pulley Box, and then head back towards the Front of the Lift, around a second Cable Sheave. Cables A and B then go to the Gusset Sheave at the bottoms of the Posts to which they attach.

Cables C and D start at their individual Anchor Plates, go around a Cable Sheave in the Pulley Box, are routed to the Front of the Lift where they go around another Sheave, head back towards the Rear of the Lift where they will go around a *third* Cable Sheave, and then go to the Gusset Sheave at the bottoms of the Posts to which they attach.

In summary: Cables A and B will go through ***two*** Cable Sheaves and then one Gusset Sheave. Cables C and D go through ***three*** Cable Sheaves and one Gusset Sheave.

See the drawing on the previous page for routing information.

To Route Cable A to the Front Powerside Post:

1. Find the four Cables for the Upper Platform and make sure you have the correct lengths going to the correct Post.

   Group the two Cable lengths that go to the Offside Posts (Cables B and D) from the two Cable lengths that go to the Powerside Posts (Cables A and C); each grouping shares an Anchor Plate.

⚠ **CAUTION** BendPak strongly recommends using gloves when handling the Cables.

2. Find the twin Cable Sheaves that go in the Front Window that you removed earlier.

   The Gusset Sheaves come installed and do not need to be removed.

3. Unscrew the Bolts on the Cable Anchor Plates so that the Button ends of the Cable may slip through the slot from underneath, as shown by the large arrow below.

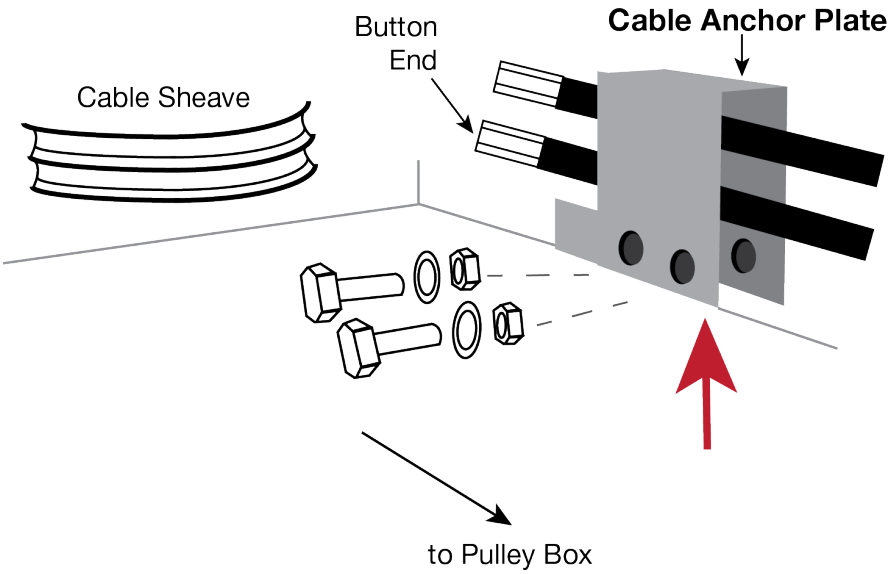

Drawing not to scale. Not all components shown. View is from underneath the Powerside Runway, facing to the Front of the Lift. Push the Cables into place from underneath the Anchor Plate.

4. Find Cable A, slip the Button end into the Cable Anchor Plate closest to the Front Powerside Post and it will lay snug enough in the slot where it will not easily slip out, then route the Threaded end towards the Pulley Box.

   Make sure to unscrew the Nut from the Threaded end of the Cable.

5. Replace the twin Cable Sheave that goes inside the Pulley Box (removed earlier) paired with Cable A, then route Cable A around the bottom Sheave.

6. Route the Threaded end of Cable A all the way to the Front of the Lift, pull the Threaded end into the window and push it toward the Front Powerside Post, then pull the Threaded end out of the Crosstube at the Bottom of the Gusset. Let the Threaded end hang out of the Crosstube for now.

7. Put the Front Cable Sheave into place, then make sure Cable A is seated in the bottom Sheave.

8. Remove the Cable Lock Pin found on the bottom of the Gusset (but keep it close, you will need it again soon).

9. Route the Threaded end ***under*** the Gusset Sheave, then up towards the Top Cap at the top of the Front Powerside Post.

   When you route it up, it ***must*** be between the Gusset Sheave and the Slack Safety Sheave, as shown below.

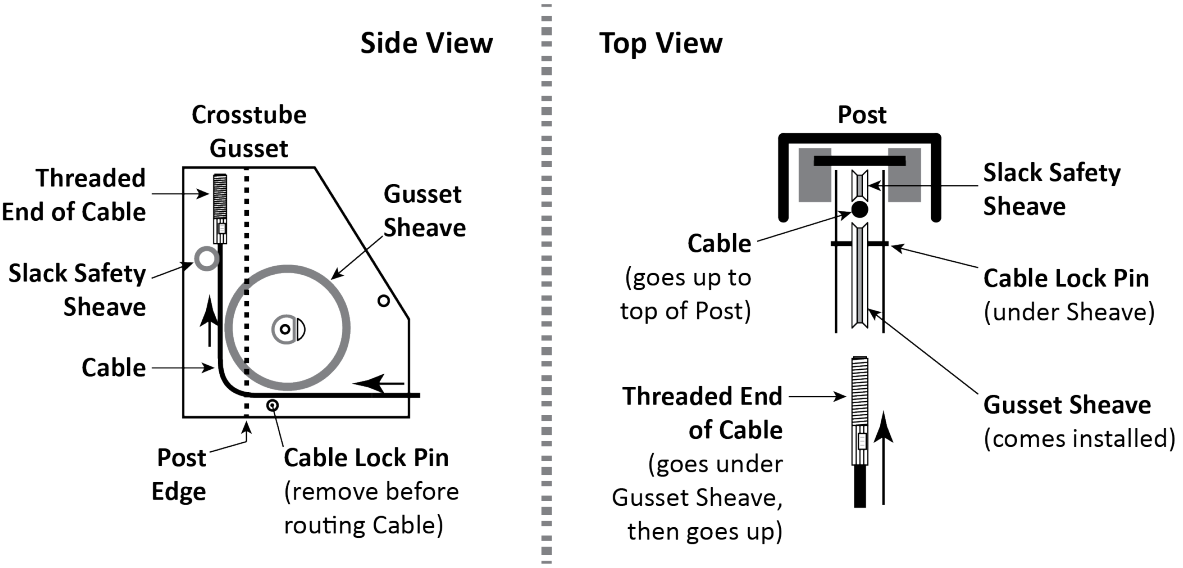

Drawing not to scale. Not all components shown. Includes side view and top view of same area.

Important: When routing a Cable to its Post, the Cable must go ***under*** the Gusset Sheave and then, when it heads up towards to the top of the Post, it must be on the side of the Slack Safety Sheave. If the Cable is ***not in this exact location***, the Slack Safeties will ***not*** work correctly.

10. Push the Threaded end through the Top Cap and hand tighten it in place with the Nut you removed just before routing the Cable.

    You only need to hand tighten the Nut at this point so that there is little movement in the cabling. You will securely tighten all four Nuts later.

    Note: The Threaded end of Cable A should go just a little bit through the Top Cap. If it is way too long, you probably have the wrong cable.

11. Reinstall the Cable Lock Pin near the bottom of the Crosstube Gusset.

    Cable A is now correctly routed to the Front Powerside Post.

To Route Cable B on the Front Offside Post:

1. Find Cable B, slip the Button end up into the Cable Anchor Plate closest to the Front Offside Post until the Cable is held snug in the Slot, then route the Threaded end towards the Pulley Box.

   Make sure to unscrew the Nut from the Threaded end of the Cable.

2. Replace the other twin Cable Sheave that goes in the Pulley Box, then make sure Cable B is seated correctly in the bottom Sheave.

   The following drawing shows the general direction to route the Cables through the Pulley Box.

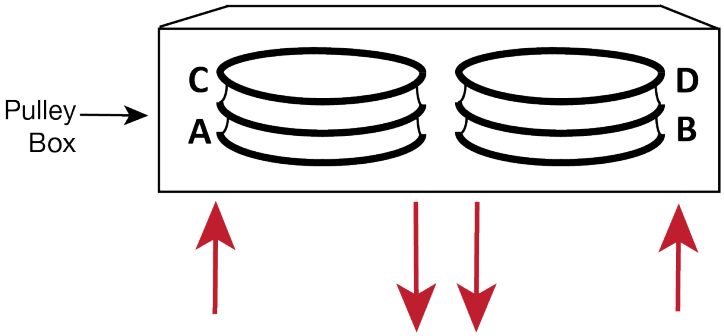

   Drawing not to scale. Not all components shown. View is underneath Powerside Runway, facing towards the Rear of Lift.

3. Route the Threaded end of Cable B all the way to the Front of the Lift, pull the Threaded end into the Window on the Crosstube and push it towards the Front Offside Post, then pull the Threaded end out of the Crosstube at the Bottom of the Gusset.

   Let the Threaded end hang out of the Crosstube for now.

4. Replace the other twin Cable Sheave, then make sure Cable B is seated in the bottom Sheave.

5. Remove the Cable Lock Pin on the bottom of the Gusset on the Front Offside Post (but keep it close, you will be putting it back in place soon).

6. Route the Threaded end of Cable B ***under*** the Gusset Sheave, then up towards the Top Cap at the top of the Front Offside Post.

   When you starting routing the Cable up, it ***must*** be between the Gusset Sheave and the Slack Safety Sheave.

   Important: When routing a Cable in its Post, the Cable must go ***under*** the Gusset sheave and then, when it heads up towards the top of the Post, it must be on the side of the Slack Safety Sheave. If the Cable is ***not in this exact location***, the Slack Safeties will ***not*** work correctly.

7. Push the Threaded end of Cable B through the Top Cap and ***hand tighten*** it in place with the Nut you removed just before routing the Cable.

   You only need to hand tighten the Nut at this point so that there is little movement in the cabling. You will securely tighten all four Nuts later.

   Note: The Threaded end of Cable B should go just a little bit through the Top Cap. If it is way too long or way too short, you probably have the wrong cable.

8. Reinstall the Cable Lock Pin near the bottom of the Crosstube Gusset.

   Cable B is now correctly routed to the Front Offside Post.

To Route Cable C to the Rear Powerside Post:

1. Find Cable C, slip the Button end into the Cable Anchor Plate above Cable A on the Front Powerside, then route the Threaded end towards the Pulley Box.

   Make sure to unscrew the Nut from the Threaded end of the Cable.

2. Route the Threaded end of Cable C around the Cable Sheave above Cable A in the Pulley Box, then make sure Cable C is seated correctly in the top Sheave, as shown on the previous page.

3. Pull the Threaded end of Cable C all the way to the Front of the Lift, then route the Threaded end around the top Cable Sheave already in place.

4. Pull the Threaded end of Cable C all the way back towards the Rear Powerside Post, using the Retaining Rings on the side of the Runway to hold the Cables.

5. Replace Rear Sheave C (removed earlier), then make sure Cable C is seated in Rear Sheave C.

6. Pull the Threaded end out of the Crosstube at the bottom of the Gusset at the Rear Powerside Post.

   Let the Threaded end hang out of the Crosstube for now.

7. Remove the Cable lock Pin on the bottom of the Gusset on the Rear Powerside Post (but keep it close, you will be putting it back in place soon).

8. Route the Threaded end ***under*** the Gusset Sheave, then up towards the Top Cap at the top of the Rear Powerside Post.

   When you route it up, it ***must*** be between the Gusset Sheave and the Slack Safety Sheave.

   Important: When routing a Cable to its Post, the Cable must go ***under*** the Gusset Sheave and then, when it heads up towards the top of the Post, it must be on the side of the Slack Safety Sheave. If the Cable is ***not in this exact location***, the Slack Safeties will ***not*** work correctly.

9. Push the Threaded end through the Top Cap and ***hand tighten*** it in place with the Nut removed just before routing the Cable.

   You only need to hand tighten the Nut at this point so that there is little movement in the cabling. You will securely tighten all four Nuts later.

   Note: The Threaded end of Cable C should go just a little bit through the Top Cap. If it is way too long or way too short, you probably have the wrong cable.

10. Reinstall the Cable Lock Pin near the bottom of Crosstube Gusset.

    Cable C is now correctly routed to the Rear Powerside Post.

To Route Cable D to the Rear Offside Post:

1. Find Cable D, slip the Button end into the Cable Anchor Plate above Cable B on the Front Offside, then route the Threaded end towards the Pulley Box.

   Make sure to unscrew the Nut from the Threaded end of the Cable.

2. Route the Threaded end of Cable D around the Cable Sheave above Cable B in the Pulley Box, then make sure Cable D is seated correctly in the top Sheave.

3. Pull the Threaded end of Cable D all the way to the Front of the Lift, then route the Threaded end around the top Cable Sheave already in place.

4. Pull the Threaded end of Cable D all the way back towards the Rear Offside Post, using the Retaining Rings on the side of the Runway to hold the cables.

5. Replace Rear Sheave D, then make sure Cable D is seated in Rear Sheave D.

6. Pull the Threaded end of Cable D out of the Crosstube at the bottom of the Gusset at the Rear Offside Post.

   Let the Threaded end hang out of the Crosstube for now.

7. Remove the Cable Lock Pin on the bottom of the Gusset on the Rear Offside Post (but keep it close, you will be putting it back in place soon).

8. Route the Threaded end ***under*** the Gusset Sheave, then up towards the Top Cap at the top of the Rear Offside Post.

   When you route it up, it ***must*** be between the Gusset Sheave and the Slack Safety Sheave.

   Important: When routing a Cable to its Post, the Cable must go ***under*** the Gusset Sheave and then, when it heads up towards the top of the Post, it must be on the side of the Slack Safety Sheave. If the Cable is ***not in this exact location***, the Slack Safeties will ***not*** work correctly.

9. Push the Threaded end through the Top Cap and ***hand tighten*** it in place with the Nut you removed just before routing the Cable.

   You only need to hand tighten the Nut at this point so that there is little movement in the Cabling. You will securely tighten all four Nuts later.

   Note: The Threaded end of Cable D should go just a little bit through the Top Cap. If it is way too long or way too short, you probably have the wrong cable.

10. Reinstall the Cable Lock Pin near the bottom of the Crosstube Gusset.

    Cable D is now correctly routed to the Rear Offside Post.

To finish the Cable routing procedure for the Upper Platform, go back and make sure each Cable is correctly seated in the Cable Sheaves and Gusset Sheave that it passes through. Also, make sure that the Cable Anchor Plates are secured back in place.

Before routing your Cables, make sure the Piston of the Hydraulic Cylinder has been extended, which is part of the procedure described in **Installing the Return Line**.

The following drawing shows the routing for all four Cables on the **Lower Platform**.

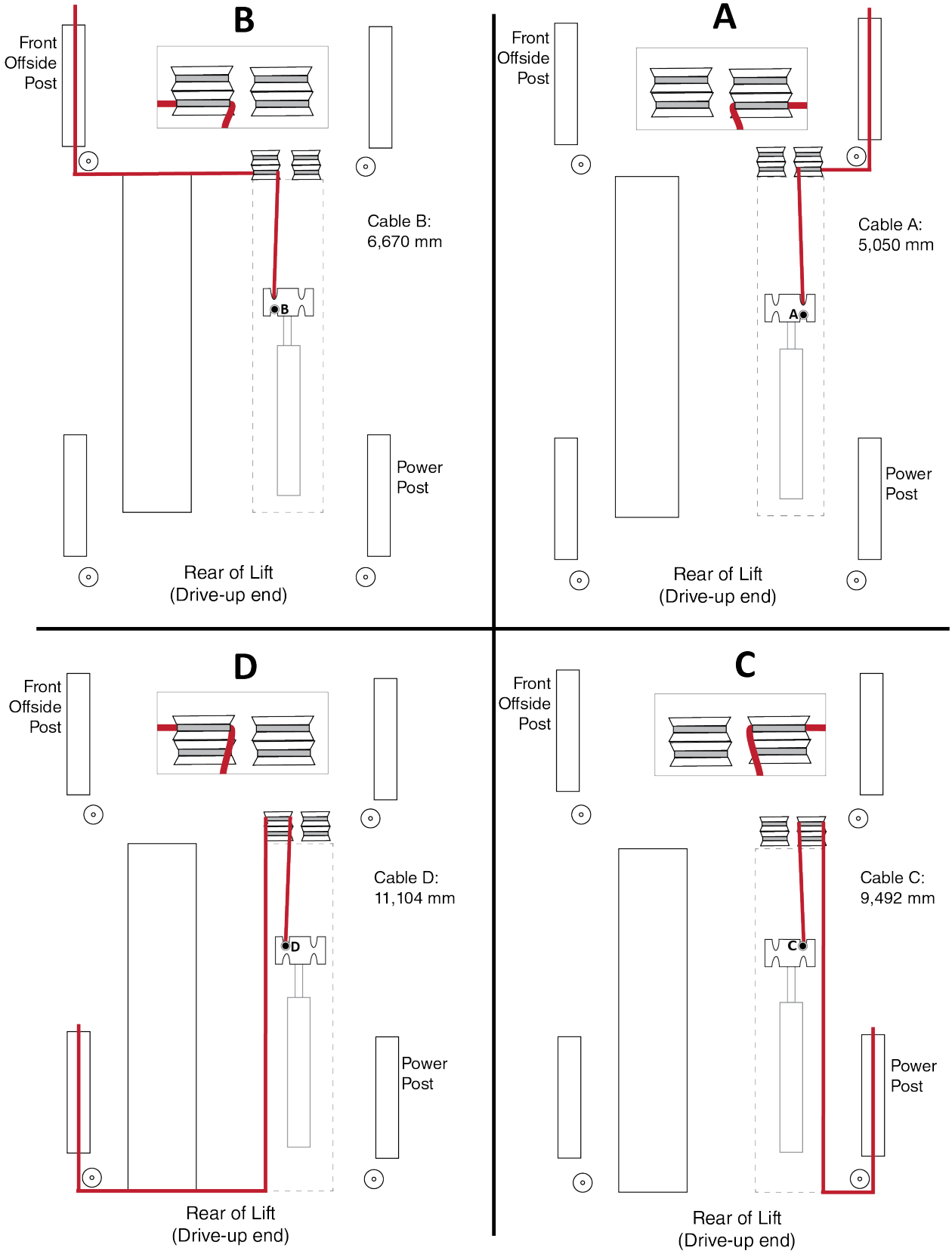

Routing the Cables on the Lower Platform

Unlike the Upper Platform, the Lower Platform uses a Tie Plate to hold the Button ends of each Cable. The Button ends of each Cable are held on one side of the Tie Plate (as shown below), while the rest of the Cable goes through the Tie Plate and the Retaining Plate on its way towards the appropriate Cable Sheaves and then to the Posts to which it attaches.

The Lower Platform comes with a Retaining Plate on one side of the Tie Plate. The Retaining Plate holds the Button ends of the Cables in place after all four Cables are installed. ***Do not take the Retaining Plate off to install the Cables***; instead, loosen it so that you can slip the Button end of the Cable into the correct slot. When all four Cables are installed, tighten the Retaining Plate.

A Cable and its corresponding Cable Sheave (or Sheaves) are put into place one at a time, starting from the Tie Plate to the top of the Post. Cables and their Cable Sheaves must be put into place at the same time.

All four Cables start at the Tie Plate and then go around a Cable Sheave at the ***Front*** of the Lift. Cables A and B then go to the Gusset Sheave at the bottoms of the Post to which they attach.

Cables C and D start at the Tie Plate, go around a Cable Sheave at the Front of the Lift, are routed to the Rear of the Lift where they go around another Cable Sheave, and then go to the Gusset Sheave at the bottoms of the Posts to which they attach. ***Cable Sheaves A and B at the Rear of the Lift do not exist***.

In summary: Cables A and B go through ***one*** Cable Sheave and one Gusset Sheave. Cables C and D go through ***two*** Cable Sheaves and one Gusset Sheave.

See the drawing on the previous page for routing information. Follow the steps below as listed.

Note: There are separate procedures for routing each Cable.

To route Cable A to the Front Powerside Post:

1. Find the four Cables for the Lower Platform.

   Check the lengths on each Cable to make sure you have the correct ones.

⚠ **CAUTION** BendPak strongly recommends using gloves when working with the Cables.

2. Find the twin Cable Sheaves that were taken off earlier.

   The Gusset Sheaves come installed and do not need to be removed.

3. Loosen the Retaining Plate enough so that you can slip the Button end of each Cable into its spot on the Tie Plate.

   Do not take the Retaining Plate off, just loosen the Nut enough to give you enough room to slip the Button end of each Cable into place.

4. Find Cable A, unscrew the Nut from the Threaded end (the Nut cannot be on during routing, but keep it nearby, you will need it soon), slip the Button end past the Retaining Plate and into its slot on the Tie Plate, then route the Threaded end of the Cable towards where its Cable Sheave will be at the Front of the Lift.

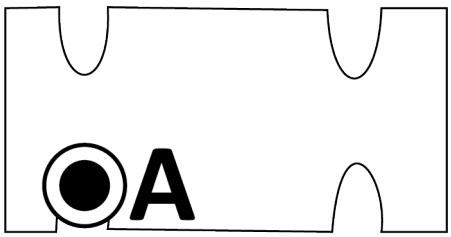

Drawing shows Button end of Cable A in its slot on the Tie Plate.

View is from Front of Lift looking back towards the Rear of the Lift. Not to scale. Not all components shown.

5. Route the Cable into the Window on the Crosstube, push it toward the Front Power Post, then pull the Threaded end out of the Crosstube at the bottom of the Gusset. Let the Threaded end hang out of the Crosstube for now.
6. Reinsert the twin Front Cable Sheave in place, and then make sure Cable A is seated in the bottom Sheave, as shown below.

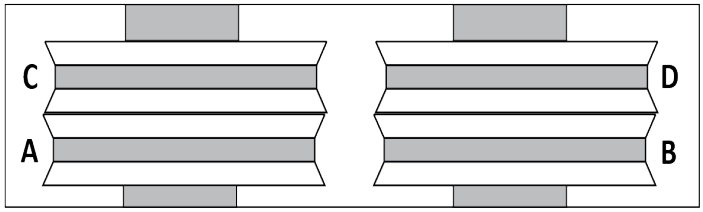

Drawing not to scale. Not all components are shown.

*View is underneath the Powerside Runway, looking towards the **Rear** of the Lift.*

7. Remove the Cable Lock Pin on the bottom of the Gusset on the Front Powerside Post (but keep it handy, you will be putting it back in place soon).
8. Route the Threaded end of Cable A ***under*** the Gusset Sheave, then up towards the Top Cap at the top of the Post.

   When routing the Cable up, it ***must*** be between the Gusset Sheave and the Slack Safety Sheave.

   Important: When routing a Cable in its Post, the Cable must go ***under*** the Gusset Sheave and then, when it heads up towards the top of the Post, it must be on the side of the Slack Safety Sheave. When the Cables are pulled tight, the Cable prevents the Slack Safety from engaging, which is what you want. If the Cable is ***not in this exact location***, the Slack Safeties will ***not*** work correctly.

9. Push the Threaded end of Cable A through the Top Cap and ***hand tighten*** it in place with the Nut you removed just before starting to route the Cable.

   You only want to hand tighten the Nut at this point so that there is a little play in the cabling. We will securely tighten all four Nuts later in the installation procedure.

   Note: The Threaded end of Cable A should go just a little bit through the Top Cap. If it is way too long, you probably have the wrong Cable. If it is just a few inches short, then the Piston on the Hydraulic Cylinder may not have been pulled out far enough.

10. Reinstall the Cable Lock Pin near the bottom of the Crosstube Gusset.

    Cable A is now correctly routed to the Front Powerside Post.

To route Cable B to the Front Offside Post:

1. Find Cable B, unscrew the Nut from the Threaded end, slip the Button end past the Retaining Plate and into its slot on the Tie Plate (note that Cable B mounts on the other side of the Tie Plate), then route the Threaded end of the Cable towards the Front of the Lift.

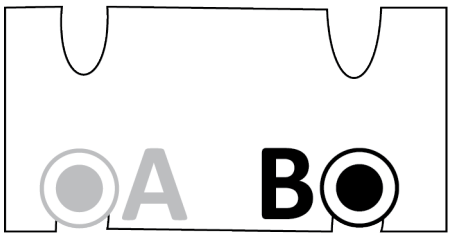

Drawing shows Button end of Cable B in its slot on the Tie Plate.

View is from Front of Lift facing towards the Rear of the Lift. Not to scale. Not all components shown.

2. Route the Cable into the Window on the Crosstube, push it toward the Front Offside Post, then pull the Threaded end out of the Crosstube at the bottom of the Gusset.

   Let the Threaded end hang out of the Crosstube for now.

3. Reinsert the other twin Cable Sheave, then make sure Cable B is seated in the bottom Cable Sheave, as shown on the previous page.

4. Remove the Cable Lock Pin on the bottom of the Gusset on the Front Offside Post.

   Keep it nearby, you will be putting it back in place soon.

5. Route the Threaded end of Cable B ***under*** the Gusset Sheave, then up towards the Top Cap at the top of the Front Offside Post.

   When you start routing the Cable up, it ***must*** be between the Gusset Sheave and the Slack Safety Sheave.

   Important: When routing a Cable in its Post, the Cable must go ***under*** the Gusset Sheave and then, when it heads up towards the top of the Post, it must be on the side of the Slack Safety Sheave. If the Cable is ***not in this exact location***, the Slack Safeties will ***not*** work correctly.

6. Push the Threaded end of Cable B through the Top Cap and ***hand tighten*** it in place with the Nut you removed just before routing the Cable.

   You only want to hand tighten the Nut at this point so that there is a little play in the cabling. You will securely tighten all four Nuts later in the installation procedure.

   Note: The Threaded end of Cable B should go just a little bit through the Top Cap. If it is way too long or way too short, you probably have the wrong Cable.

7. Reinstall the Cable Lock Pin near the bottom of the Crosstube Gusset.

   Cable B is now correctly routed to the Front Offside Post.

To route Cable C to the Rear Powerside Post:

1. Find Cable C, unscrew the Nut from the Threaded end, slip the Button end past the Retaining Plate and into its slot on the Tie Plate, then route the Threaded end towards the Front of the Lift.

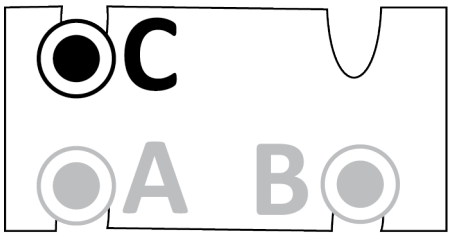

Drawing shows Button end of Cable C in its slot on the Tie Plate.

View is from Front of Lift looking back towards the Power Post. Not to scale. Not all components shown.

2. Cable C needs to go around the twin Cable Sheave at the Front of the Lift and head back towards the Rear of the Lift, so route Cable C around the top Sheave of the Front Cable Sheave already in place, then pull the Threaded end back towards the Tie Plate.
3. Pull the Threaded end of Cable C all the way to the Rear of the Lift, then push the Threaded end into the Window, heading it towards the Power Post.
4. Pull the Threaded end out of the Crosstube at the bottom of the Gusset at the Power Post.

   Let the Threaded end hang out of the Crosstube for now.
5. Put Rear Sheave C into place, then make sure Cable C is seated in Rear Sheave C.
6. Remove the Cable Lock Pin on the bottom of the Gusset on the Power Post.

   Keep it nearby, you will be putting it back in place soon.
7. Route the Threaded end of Cable C ***under*** the Gusset Sheave, then up towards the Top Cap at the top of the Power Post.

   When you route it up, it ***must*** be between the Gusset Sheave and the Slack Safety Sheave.

   Important: When routing a Cable in its Post, the Cable must go ***under*** the Gusset Sheave and then, when it heads up towards the top of the Post, it must be on the side of the Slack Safety Sheave. If the Cable is ***not in this exact location***, the Slack Safeties will ***not*** work correctly.

8. Push the Threaded end of Cable C through the Top Cap and ***hand tighten*** it in place with the Nut you removed just before routing the Cable.

   You only want to hand tighten the Nut at this point so that there is a little play in the cabling. You will securely tighten all four Nuts later in the installation procedure.

   Note: The Threaded end of Cable C should go just a little bit through the Top Cap. If it is way too long or way too short, you probably have the wrong Cable. If it is just a few inches short, then the Piston on the Hydraulic Cylinder was probably not pulled out far enough.

9. Reinstall the Cable Lock Pin near the bottom of the Crosstube Gusset.

   Cable C is now correctly routed to the Power Post.

Important: The two Cable Sheaves at the Rear of the Lift are called Rear Sheave C and Rear Sheave D. ***Cable Sheaves A and B at the Rear of the Lift do not exist***.

To route Cable D to the Rear Offside:

1. Find Cable D, unscrew the Nut from the Threaded end, slip the Button end past the Retaining Plate and into its slot on the Tie Plate, then route the Threaded end towards the Front of the Lift.

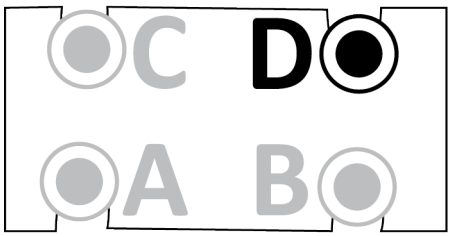

Drawing shows Button end of Cable D in its slot on the Tie Plate.

View is from Front of Lift looking towards the Rear of the Lift. Not to scale. Not all components shown.

2. Cable D needs to go around the twin Cable Sheave at the Front of the Lift and head back towards the Rear of the Lift, so route Cable D around the top Sheave of the Front Cable Sheave already in place, then pull the Threaded end back towards the Tie Plate.
3. Pull the Threaded end of Cable D all the way to the Rear of the Lift, then push the Threaded end into the Window and towards the Rear Offside Post.
4. Pull the Threaded end out of the Crosstube at the bottom of the Gusset.

   Let the Threaded end hang out of the Crosstube for now.
5. Put Rear Sheave D into place, then make sure Cable D is seated in Rear Sheave D.
6. Remove the Cable Lock Pin on the bottom of the Gusset on the Rear Offside Post.

   Keep it nearby, you will be putting it back in place soon.
7. Route the Threaded end of Cable D ***under*** the Gusset Sheave, then up towards the Top Cap at the top of the Rear Offside Post.

   When you start routing the Cable up, it ***must*** be between the Gusset Sheave and the Slack Safety Sheave.

   Important: When routing a Cable in its Post, the Cable must go ***under*** the Gusset Sheave and then, when it heads up towards the top of the Post, it must be on the side of the Slack Safety Sheave. If the Cable is ***not in this exact location***, the Slack Safeties will ***not*** work correctly.

8. Push the Threaded end of Cable D through the Top Cap and ***hand tighten*** it in place with the Nut you removed just before routing the Cable.

   You only want to hand tighten the Nut at this point so that there is a little play in the cabling. You will securely tighten all four Nuts later in the installation procedure.

   Note: The Threaded end of Cable D should go just a little bit through the Top Cap. If it is way too long or way too short, you probably have the wrong Cable.
9. Reinstall the Cable Lock Pin near the bottom of the Crosstube Gusset.

   Cable D is now correctly routed to the Rear Offside Post.

To finish the Cable routing procedure for the Lower Platform, go back and make sure each Cable is correctly seated in the Cable Sheave (or Sheaves) and Gusset Sheave that it passes through. Also, make sure that the Button ends of each Cable are secured in the Tie Plate and tighten the Tie Plate.

Working with Compression Fittings and Tubing

Your Lift comes with a roll of ¼ inch, black, polyethylene Tubing (also called Poly-Flo® Tubing) that is used with Compression Fittings in two ways: for the Return Line and for the Air Lines on each Platform.

Important: While both lines use Tubing and Compression Fittings, the Return Line and Air Lines are used for completely separate purposes; do not connect the two together.

Note: Compression Fittings are different from Hydraulic Fittings. This section covers Compression Fittings only.

The components involved with Compression Fittings include:

- **¼ inch, black, polyethylene Tubing**. You use a single piece of Tubing for the Return Line. The Air Lines require multiple Tubing pieces. Create the Tubing pieces for both the Return Line and the Air Lines by cutting lengths from the long roll of Tubing supplied with your Lift.
- **Elbow Compression Fittings**. Each Return Line uses an Elbow Compression Fitting on the Hydraulic Cylinder and then another Elbow Compression Fitting on the Power Unit.
- **Tee Compression Fittings**. Each Platform requires three Tee Compression Fittings for the Air Lines.
- **Nuts, Ferrules, Rods, and Threads**. Each connector on Elbow and Tee Compression Fittings have a Nut, Ferrule, Rod, and Threads (see drawing below). The Nut holds the Tubing and Fitting together. The Ferrule compresses when you tighten the Nut on the Threads to make a secure connection. The Rod goes inside the Tubing so that nothing leaks out.

The following drawing shows the components of a connector on a Tee Compression Fitting.

Important: ***Ferrules can only be tightened once***. When you tighten the Nut on the Threads, the Ferrule gets compressed; it literally changes shape and ***cannot*** be used again.

To connect Tubing to a Compression Fitting:

1. Push the Tubing through the Nut and over the Rod.

   Do not push hard; you only need the Tubing to go a little way over the Rod. You cannot see the Ferrule at this point, but the Tubing must go through the Ferrule and over the Rod.

2. Slide the Nut on the Tubing ***away from the Fitting***, if the Nut is still on the Threads, unscrew it from the Threads and then slide it away from the Fitting. See the drawing above.
3. Slide the Ferrule over the Tubing, away from the Fitting and towards the Nut.
4. With the Nut and the Ferrule out of the way, push the Tubing further over the Rod until it stops.
5. Slide the Ferrule and the Nut back to the Threads on the Fitting.

   The Ferrule goes around the Rod and under the Threads. The Nut goes onto the Threads.

6. Tighten the Nut.

   Remember that the Ferrule can only be used once; do not tighten the Nut until everything is ready.

Installing the Return Lines

Each Platform has its own Return Line; the Return Line takes excess Hydraulic Fluid coming out of the Hydraulic Cylinder and sends it back into the Fluid Reservoir on the Power Unit.

The Return Line is a single piece of ¼ inch, black, polyethylene Tubing with Elbow Compression Fittings on each end. You need to cut off a piece of the supplied Tubing of the right length to create the Return Line for each Platform.

Important: The Return Line uses the same ¼ inch, black, polyethylene Tubing as the Air Lines. Be sure not to confuse the two; ***the Return Line and the Air Lines do completely different things and must be kept separate from each other***.

The following drawing shows where the Return Line connects on the Lift.

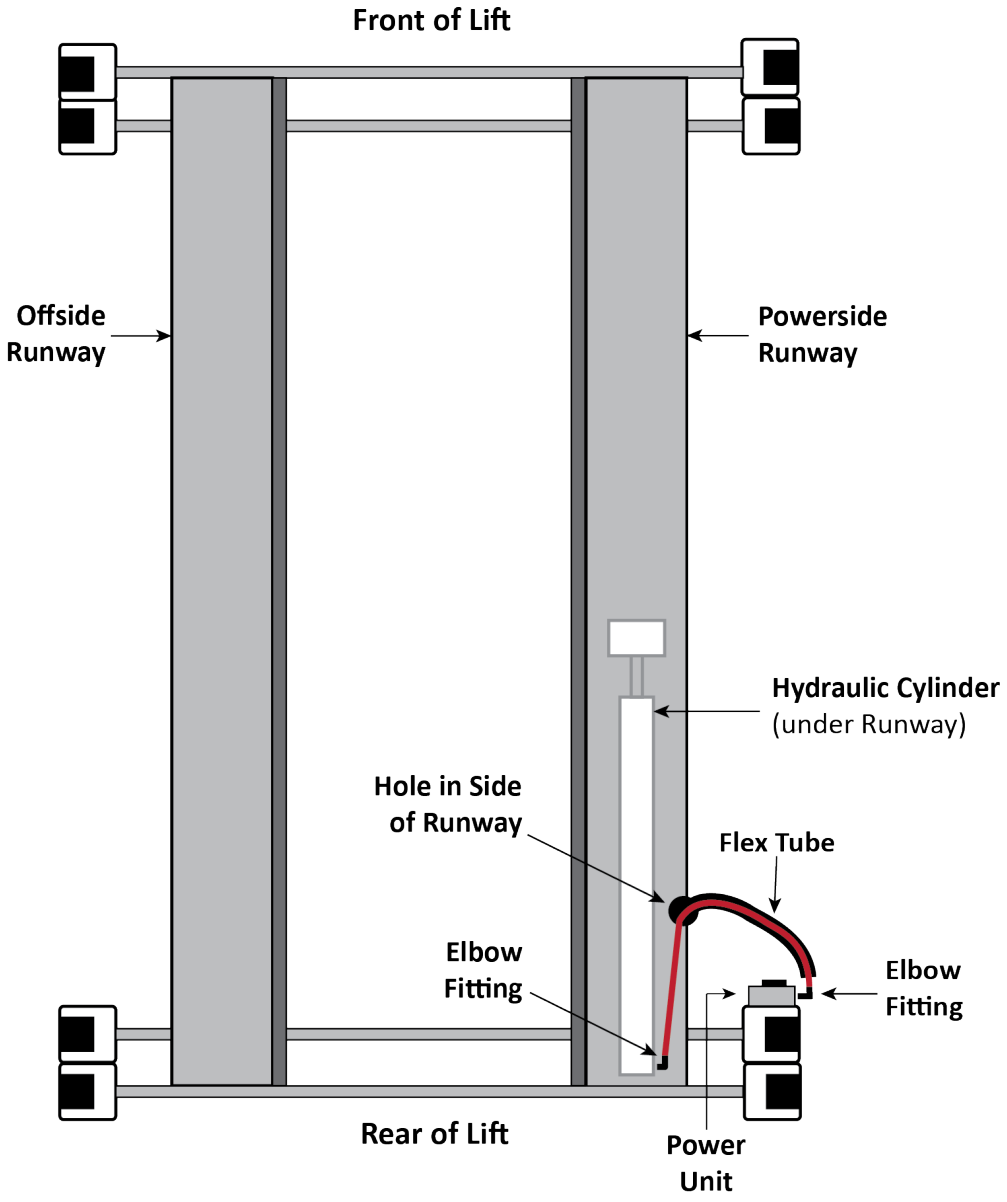

Drawing not to scale. Some components not shown or exaggerated for clarity. Installing the Return Lines is the same for both Platforms.

To install the Return Lines:

1. Pick a Platform to begin with, then attach an air pressure source to the Return Line Connector on the Hydraulic Cylinder and extend the Cylinder's Piston (and Tie Plate if you are working on the Lower Platform) until it is fully extended.

   Do not exceed 75 PSI. If the Cylinder does not move, stop using air pressure; instead, use a pulling device, such as a Come Along Tool, to extend the Piston (also the Tie Plate for the Lower Platform only).

⚠ **CAUTION** Be careful not to damage the Piston.

2. Measure the distance from the Return Line connector on the Hydraulic Cylinder to the Return Line connector on the Power Unit.

   Important: When measuring for the Upper Platform, make sure to cut the Return Line long enough so it will not pull taut when the Platform is raised.

3. Cut a piece of Tubing to the measured length from the roll of Tubing that comes with the Lift.

   It is better to cut the Tubing a little too long rather than a little too short.

4. Route the Tubing from the Hydraulic Cylinder through the Flex Tube opening, and out next to where the Power Unit will be installed.

   Let the Tubing hang out of the opening for now.

5. Remove the Shipping Plug from the Return Line Connector on the Hydraulic Cylinder.
6. Connect and tighten the Elbow Compression Fitting into the opening where the Shipping Plug used to be.
7. Connect one end of the Return Line to the Elbow Compression Fitting you just installed.

   Refer to **Working with Compression Fittings and Tubing** for instructions.

8. Leave the Power Unit end of the Return Line hanging out of the Flex Tube opening for now.

   It will be connected to a Tee Fitting and then to the Power Unit later in the installation.

9. Repeat steps 1-8 for the other Platform.

Installing the Air Lines

The Air Lines use air pressure to disengage the Safety Locks in each Post so that you can lower the Runways. ***It is your responsibility to supply the air pressure (minimum of 75 PSI)***

You will need more of the ¼ inch, black, polyethylene Tubing that came with the Lift and three Air Line Tee Connectors to install the Air Lines on each Platform.

Important: Do not confuse the Air Lines with the Return Line. They use the same Tubing and similar-looking connectors, but they are used for completely different things; the two systems cannot be connected to each other.

The Air Line Elbow Connectors on the Crosstube Gussets come installed from the factory.

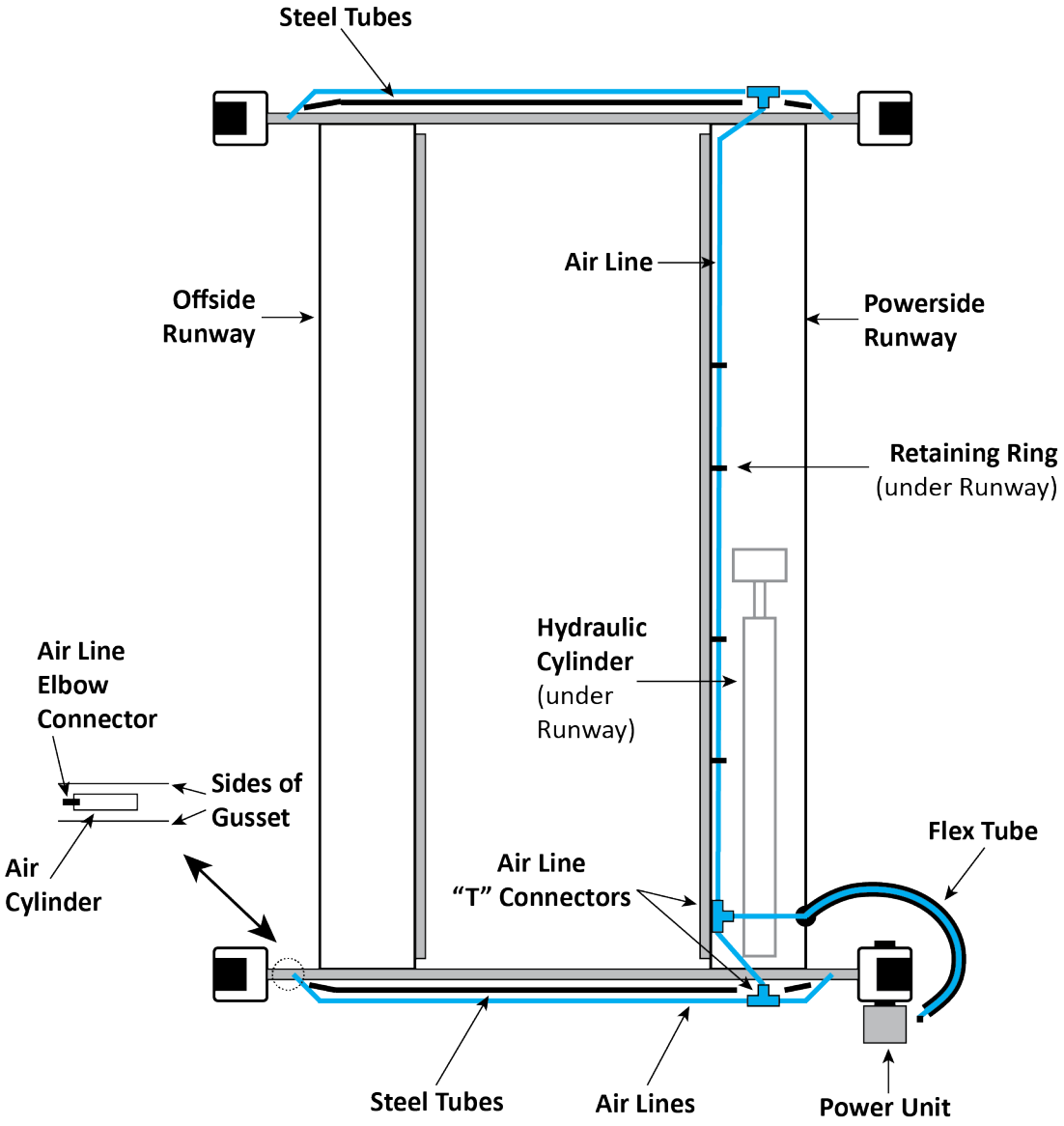

Drawing not to scale. Some components not shown. Air Lines shown outside Steel Tubes for clarity. Installing the Air Lines is the same for both Platforms.

To install the Air Lines:

1. Find the roll of supplied ¼ inch, black, polyethylene Tubing and three Air Line Tee Connectors.
2. Pick a Platform to start with, then measure the distances for each of the seven (7) Tubing pieces you will need (see the drawing on the previous page) for the Air Lines.

Important: Make sure to cut the Tubing piece that will go through the Flex Tube on the Upper Platform long enough where it will not pull taut when the Platform is raised.

3. Cut seven pieces of Tubing to the measured lengths from the roll of Tubing.
4. Connect the various pieces of Tubing to the Air Line Tee Connectors on the Lift, as shown in the drawing on the previous page for the locations of the Tubing pieces.

   Make sure to position the three Air Line Tee Connectors as shown in the drawing.

   Also make sure to route the long Tubing piece that goes under the Powerside Runway through the Retaining Rings. You need to make sure the Air Lines are out of the way of where the Cables will be routed.

   ⚠ **WARNING** Make sure to route the Tubing pieces on the ***outside*** ends of the Front and Rear Crosstubes through the Steel Tubes on the ends of the Crosstubes. This keeps the Tubing and the Tee Connectors from being disturbed as you use the Lift. This is important, because if the Air Lines are disturbed, the Safety Locks on the Lift may not work correctly. If you notice that Tubing has become disconnected from an Air Line Tee Connector, take the Lift out of service and get the Air Lines fixed.

   Refer to **Working with Compression Fittings and Tubing** for more information about connecting the Tubing to the Air Line Tee Connectors.

5. Leave the Power Unit end of the Air Line hanging out of the Flex Tube opening for now.

   It will be connected to a Tee Fitting and the Pushbutton Air Valve later.

6. Repeat steps 1-5 for the other Platform.

Installing the Hydraulic Lines

The Hydraulic Line moves hydraulic fluid from the Power Unit to the Hydraulic Cylinder, which raises the Runways. Your Lift comes with two Hydraulic Lines, of different lengths: 13.5 feet (4,090 mm) for the Upper Platform and 11 feet (3,380 mm) for the Lower Platform.

To install the Hydraulic Lines, you will need:

- **The Hydraulic Line**. The Straight end attaches at the Hydraulic Cylinder and the Curved end comes out of the Flex Tube so that it can attach to the Platform Switch Valve (on the Power Unit). One Hydraulic Line per Platform.
- **JIC to NPT elbow fittings**. The JIC end attaches to the Straight end of the Hydraulic Line and the NPT end to the Hydraulic Cylinder. One fitting per Platform.
- **JIC to NPT nipple fittings**. The JIC end attaches to the Curved end of the Hydraulic Line and the NPT end to the Platform Switch Valve. One fitting per Hydraulic Line.
- **One NPT to ORB hydraulic fitting**. The NPT end attaches to the Platform Switch Valve and the ORB end attaches to the Power Unit.

The following drawing shows where the Hydraulic Line goes on the Lift.

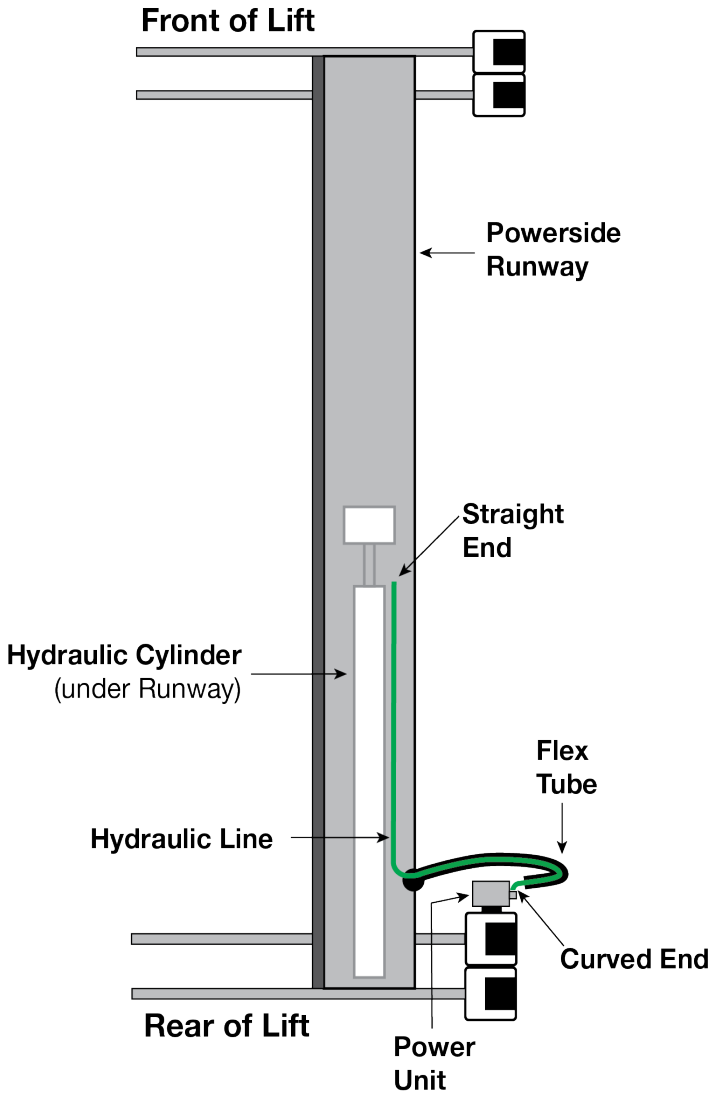

Drawing not to scale. Not all components shown. Offside Runway not shown.

Installing the Hydraulic Line for both Platforms is the same.

The following drawing shows the Hydraulic Line and its connectors in more detail.

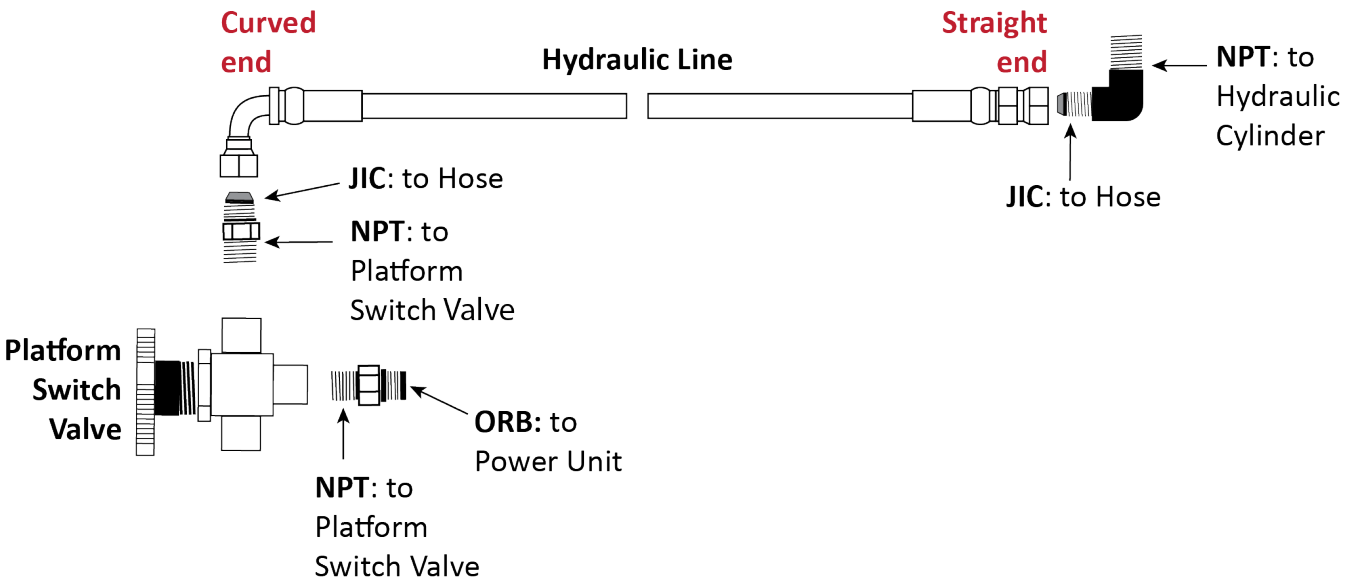

To install the Hydraulic Lines:

1. Pick a Platform to begin with, then find the appropriate Hydraulic Line and a JIC-to-NPT Hydraulic Elbow Fitting.
2. Take the Curved end of the Hydraulic Line and, starting at the Hydraulic Cylinder, route the Curved end through the Retaining Rings and the Flex Tube opening.

   When you are done, the Curved end should be coming out of the Flex Tube opening near the Power Unit.
3. On the Hydraulic Cylinder, remove the Shipping Plug from the connector at the Piston Rod end.
4. Attach the NPT connector on the JIC-to-NPT Fitting to the connector on the Hydraulic Cylinder where you just removed the Shipping Plug

   Tighten until secure.
5. Attach the Straight end of the Hydraulic Line to the JIC connector.

   Tighten until secure.
6. Leave the Curved end of the Hydraulic Line coming out of the Flex Tube opening; do not connect it to the Power Unit at this point.

Note: The JIC-to-NPT Nipple Fittings (connects the Hydraulic Lines to the Platform Switch Valve) and NPT-to-ORB Fitting (connects the Platform Switch Valve to the Power Unit) will be connected later in the installation.

Installing the Safety Shutoff Bar and Microswitch

The Safety Shutoff Bar and the Microswitch go on the underside of the Aluminum Decks on the Upper Platform, near the Rear of the Lift; together, they prevent a Vehicle from hitting the Upper Platform. If you are raising a Vehicle on the Lower Platform and the Vehicle's roof pushes up against the Safety Bar, the Safety Shutoff Bar pivots up, causing the Microswitch's Lever to engage. When engaged, the Lift immediately stops moving up and shuts off all electric power.

The following steps describes how to ***install***, but not make the connections to, the Microswitch for your Lift. An Electrician is ***not*** needed to install the Microswitch, only to connect the Microswitch to the Power Unit. That will be covered later in the installation process.

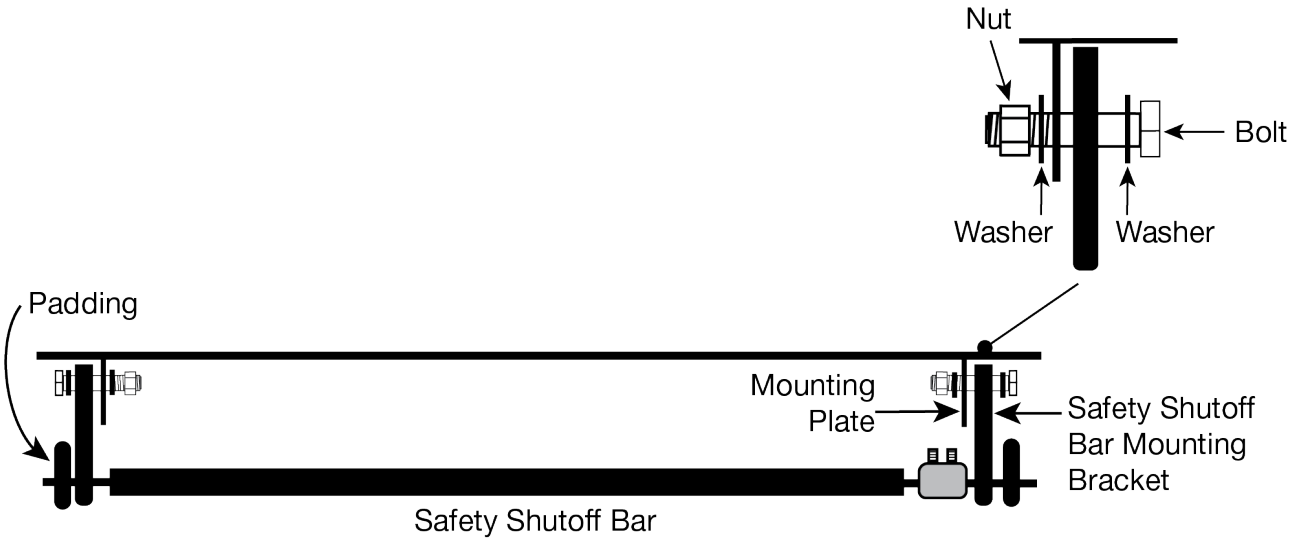

Drawing not to scale. Not all components shown. Side view. Mounting Plate is separated from the Safety Bar Mounting Plate for clarity.

To install the Safety Shutoff Bar:

1. Locate one short and long Aluminum Deck, then orient the Decks so that the Deck with the opening (used for routing the Microswitch cable to the Power Unit) is along the Rear Powerside Runway.

   Refer to **Installing the Runways** for more information about Runway Placement.

2. Lower the Decks onto the Utility Rails between the Runways.
3. Find the Safety Shutoff Bar, then align the marked holes on the Safety Bar Mounting Bracket with the Mounting Plates underneath the Deck.

   Fasten the Safety Shutoff Bar to the Mounting Plate using a Bolt, Nut and a Washer on each end, as shown above.

4. Go to the middle of the Runways, underneath where the two Aluminum Decks meet.
5. To lock the two Decks together, use a double-threaded Rod and secure it in place with a Washer and Nut on each end.

Tip There is no Safety Shutoff Bar to install under the Lower Platform, so you can hold off installing the Aluminum Decks (two shorter Decks) if you want, whatever works best for your installation process.

To attach the Microswitch:

1. Find the Microswitch device, then go to the Safety Mounting Bracket closest to the Power Unit.

   If the Microswitch does not already have the Cover on it, make sure to do so now.

2. To attach the Microswitch to the Mounting Bracket, orient the Microswitch with the Lever on the top side, facing the right, as shown below.

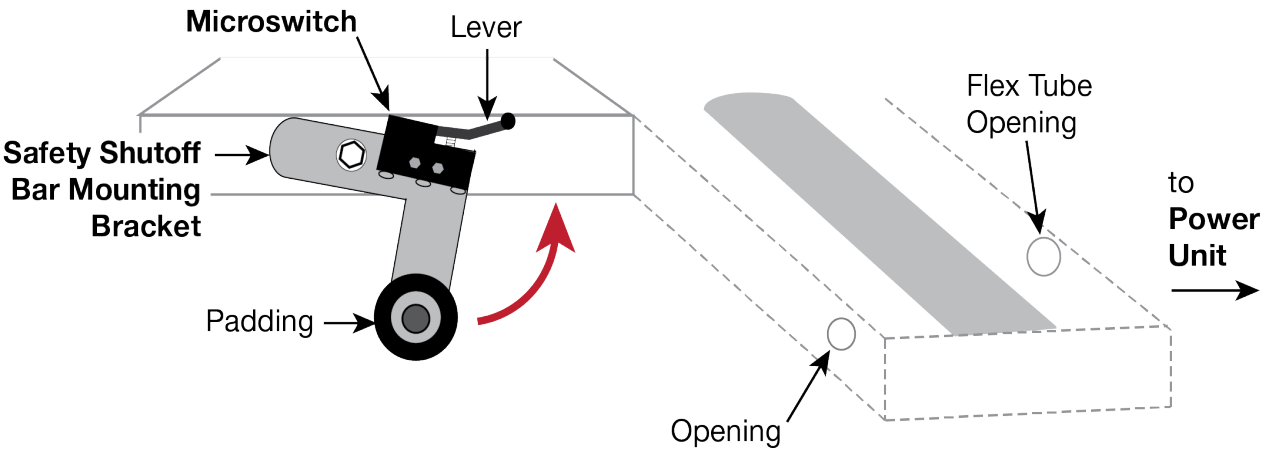

   Not drawn to scale. Not all components shown. View underneath Rear of the Lift, looking towards the Front.

3. Align the marked holes on the Mounting Bracket with the guides marked on the Microswitch, then tighten it to the Mounting Bracket using two button head screws.

4. Make sure the Microswitch is snug against the Mounting Plate.

   The Microswitch will be connected to a cable that goes to the Power Unit later in the installation.

Installing the Power Unit

This section describes how to ***install***, but not make the connections to, the Power Unit for your Lift. An Electrician is ***not*** needed to install the Power Unit; one is required to connect the Power Unit to its power source.

The Power Unit ***must*** be installed on the Power Post; attach it to one of the two Mounting Brackets, whichever is more convenient for the installation.

Important: Many people install the Flex Tube Bracket Plate and/or the Zero Angle Bracket at the same time as they install the Power Unit. Refer to **Installing the Flex Tube** and **Installing the Pushbutton Air Valve** for more information to see if this makes sense for your installation.

⚠ **DANGER** Risk of explosion: The Power Unit has internal arcing or parts that may spark and should not be exposed to flammable vapors. Never expose the Power Unit motor to rain or other damp environments. Damage to the motor caused by water is ***not*** covered by the warranty.

The Hydraulic Fluid reservoir on the Power Unit must be filled with Hydraulic Fluid or automatic transmission fluid before you begin normal operation of the Lift. ***When you receive the Lift, the fluid reservoir is empty.*** The Power Unit will not work correctly until it is filled with approved Hydraulic Fluid.

Approved fluids are any general purpose ISO-32, ISO-46, or ISO-68 hydraulic fluid, approved automatic transmission fluids such as Dexron III, Dexron VI, Mercon V, Mercon LV, or any synthetic multi-vehicle automatic transmission fluid.

⚠ **WARNING** Do not run your Power Unit without Hydraulic Fluid; you will damage it.

Even though you are not connecting the Power Unit at this point, you can fill the Hydraulic Fluid reservoir with fluid.

To install the Power Unit:

1. Find the four supplied Hex Head Bolts, Flat Washers, and Nyloc Nuts.
2. Line up the holes on the Power Unit Back Plate with the four holes in the Mounting Bracket you want to use.

   If you are going to install the Flex Tube Bracket Plate and/or the Zero Angle Bracket at the same time as the Power Unit, now is the time to put those into place.

   Tip The Power Unit is heavy. BendPak recommends having one person hold the Power Unit while another person bolts it into place.

3. Connect the Power Unit to the desired Mounting Brackets on the Power Post.
4. Fill the Hydraulic Reservoir on the Power Unit with approved fluids.

   The Hydraulic Reservoir holds approximately 7 gallons (26.5 liters). Use care to keep the fluid clean when filling the reservoir.

   Approved fluids are any general purpose ISO-32, ISO-46, or ISO-68 hydraulic fluid or approved automatic transmission fluids such as Dexron III, Dexron VI, Mercon V, Mercon LV, or any synthetic multi-vehicle automatic transmission fluid.

   Do not connect the Power Unit to a power source at this point.

Connecting the Flex Tube Bracket Plate and Angle Plate

To connect the Flex Tubes to the Power Unit, you first need to connect the Flex Tube Bracket Plate and the Flex Tube Angle Plate. That procedure is described here.

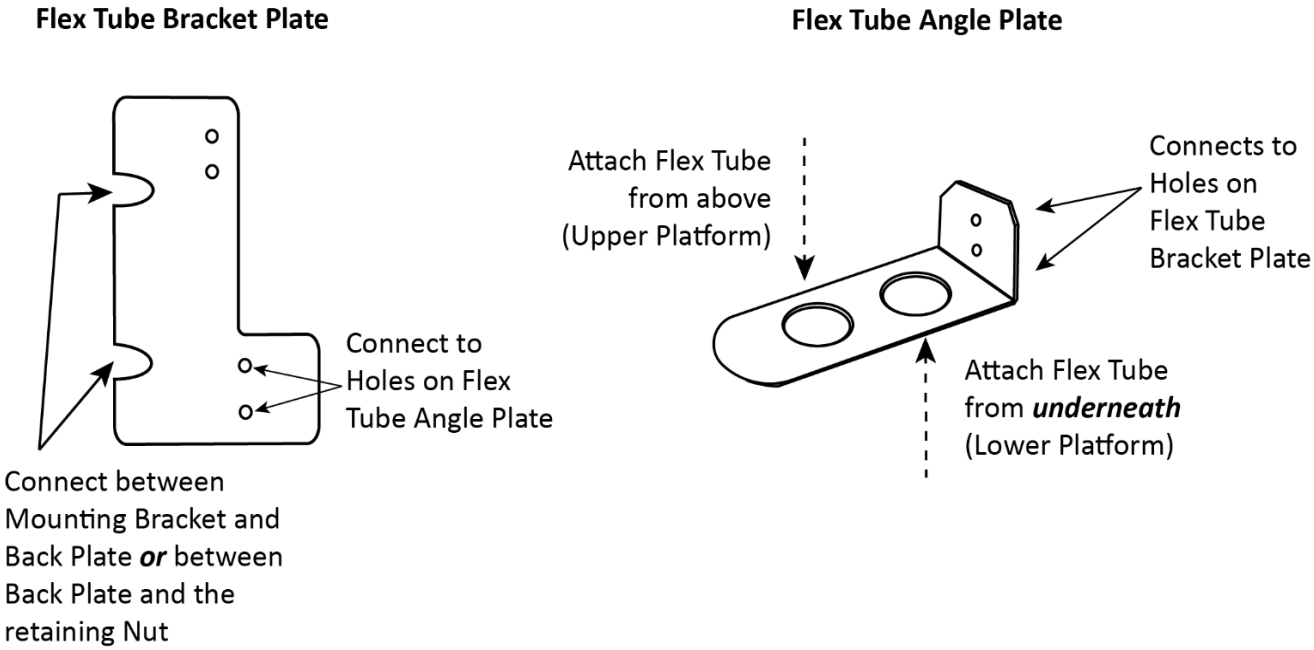

The components involved include:

- **Flex Tube Bracket Plate**. The two notches at the top attach near the Mounting Bracket on the Power Post. The two holes at the bottom connect to the Flex Tube Angle Plate.
- **Flex Tube Angle Plate**. Attaches to the Flex Tube Bracket Plate via two holes, giving you the flexibility to connect it on either side. Includes the holes to which the Flex Tubes connect.

BendPak recommends orienting the Flex Tubes so that the lines coming out of it are near where they connect on the Power Unit and to the Pushbutton Air Valve.

To connect the Flex Tubes:

1. Find the Flex Tube Bracket Plate and the Flex Tube Angle Plate.
2. Install the Flex Tube Bracket Plate.

   Location options are: between the Mounting Bracket and the Back Plate or between the Back Plate and the retaining Nut (see the drawing on the following page).

   Note: It is common to install the Flex Tube Bracket Plate between the Mounting Bracket and the Back Plate. This allows the Zero Angle Bracket (which holds the Pushbutton Air Valve and is described in the next section) to be installed between the Back Plate and the retaining Nut. This configuration is common, but not required.

The following drawing describes how to position the Flex Tube Bracket Plate between the Mounting Bracket and Back Plate.

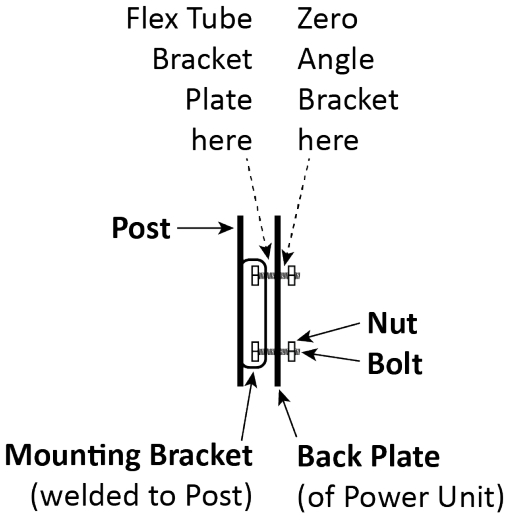

Drawing not necessarily to scale. Not all components shown. Side view of where the Power Unit attaches to the Power Post. Some aspects exaggerated for clarity.

3. Connect the Flex Tube Angle Plate to the Flex Tube Bracket Plate so that the holes for the Flex Tubes are best positioned for connecting the Return Line, the Air Line, and the Hydraulic Line.

   The Flex Tube Angle Plate can be connected on either side of the Flex Tube Bracket Plate.

Installing the Flex Tubes

Each Platform has its own Flex Tube; the Flex Tube is a flexible, black tube that attaches to a hole on the Powerside Runway on one end and to the bottom of the Flex Tube Bracket Plate (near the Power Unit) on the other end.

Your Lift comes with two Flex Tubes, one longer (Upper Platform) and one shorter (Lower Platform).

The Flex Tube consolidates and protects four different cables that come out from under the Powerside Runway on their way to the Power Unit. These cables are:

- **Return Line**. A thin, black tube that returns extra Hydraulic Fluid to the fluid reservoir on the Power Unit.
- **Air Line**. Also a thin, black tube, the Air Line provides air pressure that is used to disengage the Safety Locks so that the Runways can be lowered.
- **Hydraulic Line**. A heavy, black cable that routes hydraulic fluid from the Power Unit to the Hydraulic Cylinder.
- **Microswitch Line** (Upper Platform only). A thin cable that connects to a Microswitch device underneath the Upper Platform, shutting off electric power in the event that a Vehicle on the Lower Platform comes close to hitting the underside of the Platform above.

The following drawing shows the Flex Tube.

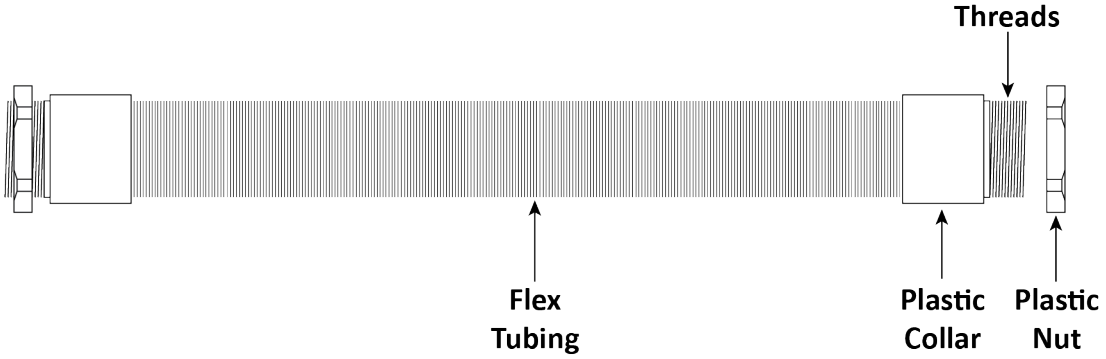

To install the Flex Tube to the Powerside Runway:

1. Pick the Platform you want to begin with, then unscrew the Plastic Nut from one end of the Flex Tube designated for that Platform.

⚠ **CAUTION** If you connect the shorter Flex Tube to the Upper Platform, it will ***not*** be long enough to reach the Power Unit when the Platform is raised. Make sure you connect the longer Flex Tube to the Upper Platform.

2. Holding the Flex Tube by the Plastic Collar, put the Threads on the end of the Flex Tube whose Plastic Nut you just removed through the hole on the Powerside Runway.
3. On the inside of the Powerside Runway, screw the Plastic Nut back onto the Threads of the Flex Tube and tighten it.
4. Holding the Flex Tube by the Plastic Collar, put the Threads through the hole on the Flex Tube Angle Plate.
5. Screw the Plastic Nut back onto the Threads and tighten.
6. Once in place, push the Hydraulic Line, Return Line, and Air Line through the Flex Tube.
7. Repeat steps 1-4 for the other Platform.

Installing the Pushbutton Air Valve

Once the Power Unit and the Flex Tubes are installed, you can install the Pushbutton Air Valve, which requires the Zero Angle Bracket (which may already have been installed).

The Pushbutton Air Valve is used to lower the Runways. It can go on either side of the Power Unit, but we recommend placing it on the side facing *away* from the Lift to be out of the way.

Once the pushbutton is in place, you need to connect it to the Air Line on one end and the customer-supplied air pressure on the other end. ***A minimum air pressure of 75 PSI / 3 CFM is required***.

The following drawing shows the Zero Angle Bracket and where it connects.

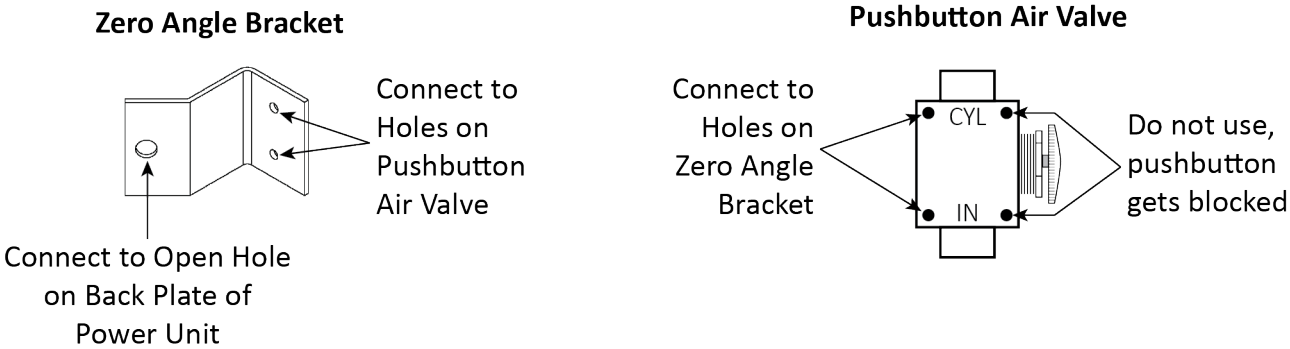

The components involved include:

- **Zero Angle Bracket**. Attaches at the Mounting Bracket on the Power Post or to other available holes on the Back Plate of the Power Unit. Holds the Pushbutton Air Valve, so be sure to orient the Zero Angle Bracket so that the Pushbutton Air Valve can be easily reached by the Lift operator.
- **Pushbutton Air Valve**. Used to lower the Platforms.
- **Air Line Tee Compression Fitting**. Connects the Air Line coming from each Platform.
- **Air Line Compression Elbow Fitting**. Connects the Pushbutton Air Valve to the Air Line coming from the Tee Fitting.
- **Straight Expander Fitting**. Connects the Pushbutton Air Valve to the customer-supplied air pressure. A minimum air pressure of 75 PSI / 3 CFM is required.

To install the Pushbutton Air Valve:

1. Find the necessary components: Zero Angle Bracket, Pushbutton Air Valve, Air Line Compression Elbow Fitting, Tee Compression Fitting, and Straight Expander Fitting.
2. Connect the Zero Angle Bracket at the desired location (if it has not already been connected).

   It can attach to an available hole on the Back Plate of the Power Unit or to one of the Bolts that connect the Power Unit to the Mounting Bracket on the Power Post.

   The best location is one that is visible and easily reached by the Lift operator.
3. Connect the Pushbutton Air Valve to the Zero Angle Bracket.

   Use the two holes on the Pushbutton Air Valve on the side away from the actual pushbutton. If you use the holes next to the pushbutton, the Zero Angle Bracket interferes with the pushbutton when you try to use it.

The following drawing shows the Pushbutton Air Valve and its connections.

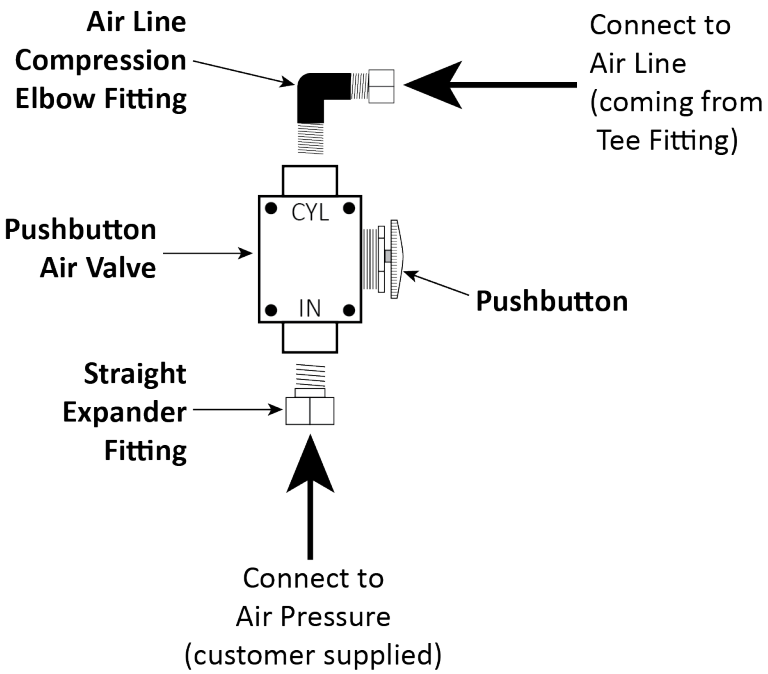

4. Connect the Air Line Compression Elbow Fitting and the Straight Expander Fitting to the appropriate locations on the Pushbutton Air Valve.

   The Elbow Fitting connects to the opening labelled **CYL**. The straight fitting to the opening labelled **IN**. See the drawing above.

5. Attach a Tee Compression Fitting to connect the Air Lines coming out of each Flex Tube.

   There is one Air Line per Platform.

6. Cut another Air Line to attach to other end of the Tee Fitting, then connect it to the Compression Fitting on the elbow fitting and the customer-supplied air to the straight fitting.

   Important: The Return Line also comes out of the Flex Tube and is the same kind of tubing as the Air Line. ***Do not attach the Return Line to the Pushbutton Air Valve by mistake***. Double check to make sure you are attaching the Air Line to the Pushbutton Air Valve.

   For the customer-supplied air pressure, a minimum of 75 PSI.

Connecting the Return Line

The Return Line connects to the Hydraulic Return connector on the Power Unit.

On each Platform, one end of the Return Line is already connected to the Hydraulic Cylinder; the other end should be coming out of the Flex Tube.

To attach the Return Line to the Power Unit:

1. Connect each Return Line (each Platform has one Return Line hanging out of the Flex Tube opening) and securely connect them to a Tee Fitting on either end.
2. Cut another piece of Tubing to attach to the other end of the Tee Fitting that connects to the Hydraulic Return connector on the Power Unit, if you haven't already done so.
3. Pick the Hydraulic Return connector on the Power Unit you want to use and remove the Shipping Plug.

Tip There is a Hydraulic Return connector on either side of the Power Unit; we recommend to use the Hydraulic Return connector facing *away* from the Lift, to be out of reach from all Lines coming out of the Flex Tubes.

4. Connect and tighten the threaded end of the remaining Elbow Compression Fitting to the Hydraulic Return connector.

   For information about connection compression fittings, refer to **Working with Compression Fittings and Tubing**.

5. Find the Return Line extending from the Tee Fitting and securely connect it to the Elbow Compression Fitting.

   Important: The Air Line, at one point, was also coming out of the Flex Tube and it uses the same kind of tubing as the Return Line. The Air Line should have been connected in the previous section, but if it was not, make sure you are attaching the Return Line to the Power Unit and not the Air Line. ***Do not attach the Air Line to the Power Unit by mistake***.

Installing the Platform Switch Valve

The Platform Switch Valve lets you control which Platform you are raising or lowering. On each Platform, the Straight end of the Hydraulic Line is already connected to the Hydraulic Cylinder; the other end (the Curved end) should be coming out of the Flex Tube. The Curved ends connect to the Platform Switch Valve; that procedure is described here.

NOTICE ***You decide which direction on the Platform Switch Valve controls each Platform***. When you attach the Hydraulic Lines to the Platform Switch Valve, the side you put the Hydraulic Line on (for each Platform) will be the direction you turn the Knob to use that desired Platform. For example, if you connect the Hydraulic Line for the Upper Platform on the right side of the Switch Valve, then you need to turn the Knob so that the arrows point to the right.

The following drawing shows the connections to make to your Platform Switch Valve.

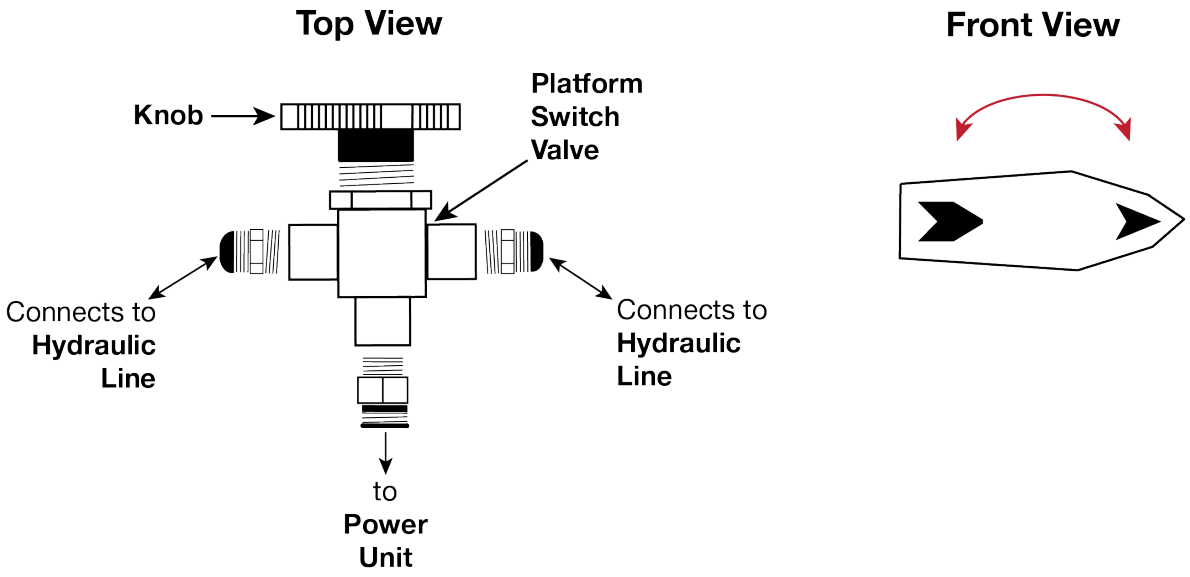

To install the Platform Switch Valve:

1. Locate the Platform Switch Valve.
2. Decide which Hydraulic Out on the Power Unit you want to use and remove the Shipping Plug.

Tip There is a Hydraulic Out Port on either side of the Power Unit; we recommend to use the Hydraulic Port facing *away* from the Lift, to be out of reach from all Lines coming out of the Flex Tubes.

3. Locate the NPT-to-ORB Fitting, then connect and securely tighten the ORB connector to the Hydraulic Out on the Power Unit, and attach the Platform Switch Valve to the NPT connector.
4. Locate two JIC-to-NPT Fittings, then attach one Fitting to each end of the Platform Switch Valve.
5. Gather the Hydraulic Lines coming out from the Flex Tube and bring them towards the Power Unit.
6. Connect and securely tighten one Hydraulic Line on either end to the Fittings you just installed.

   Make sure you take note of which side each Platform is attached to for when you start using the Lift.

Contacting the Electrician

As mentioned previously, there are installation tasks that ***require*** a certified Electrician.

⚠ **DANGER** All wiring ***must*** be performed by a licensed, certified Electrician. If someone who is not a certified Electrician attempts these tasks, they could damage the Lift or be electrocuted, resulting in serious injury or even death.

The Electrician needs to:

- **Connect a 220 VAC power source to the Power Unit**. A power source is required. Refer to **Connecting the Power Source** for more information.
- **Connect the Microswitch.** Ensures you can quickly and completely interrupt electrical power to the Lift in the event that a Vehicle's roof on the Lower Platform comes to close to hitting the underside of the Upper Platform. UL cable included.
- **Install a Power Disconnect Switch**. Ensures you can quickly and completely interrupt electrical power to the Lift in the event of an electrical circuit fault, emergency situation, or when equipment is undergoing service or maintenance. You must put it within sight and easy reach of the Lift operator. Refer to **Install a Power Disconnect Switch** for more information.
- **Install a Thermal Disconnect Switch**. Ensures the equipment shuts down in the event of an overload or an overheated motor. Refer to **Install a Thermal Disconnect Switch** for more information. ***The motor on the Power Unit that comes with the Lift is not thermally protected***.

The Electrician is responsible for providing:

- an appropriate plug to attach to the Power Unit
- an appropriate Power Cord that goes from the power source to the plug on the Power Unit
- a Power Disconnect Switch
- a Thermal Disconnect Switch

⚠ **DANGER** Risk of explosion: This equipment has internal arcing or parts that may spark and should not be exposed to flammable vapors. The Power Unit's motor should not be located in a recessed area or below floor level. Never expose the motor to rain or other damp environments; damage to the motor caused by water is ***not*** covered by the warranty.

Connecting the Power Source

The standard Power Unit for your Lift is 220 VAC, 60 Hz, single phase. The Power Unit must be connected to an appropriate power source.

Refer to **Wiring Diagrams** for wiring information.

⚠ **DANGER** All wiring ***must*** be performed by a licensed, certified Electrician. Do not perform any maintenance or installation on the Lift without first making sure that main electrical power has been disconnected from the Lift and ***cannot*** be re-energized until all procedures are complete. If your organization has Lockout/Tagout policies, make sure to implement them after connecting to a power source.

Important electrical information:

- Improper electrical installation can damage the motor; this is not covered under warranty.
- Use a separate circuit breaker for each Power Unit.
- Protect each circuit with a time-delay fuse or circuit breaker. For a 220 VAC, single phase circuit, use a 25 amp or greater fuse.

The following drawing shows the configuration for **Power Unit 1**.

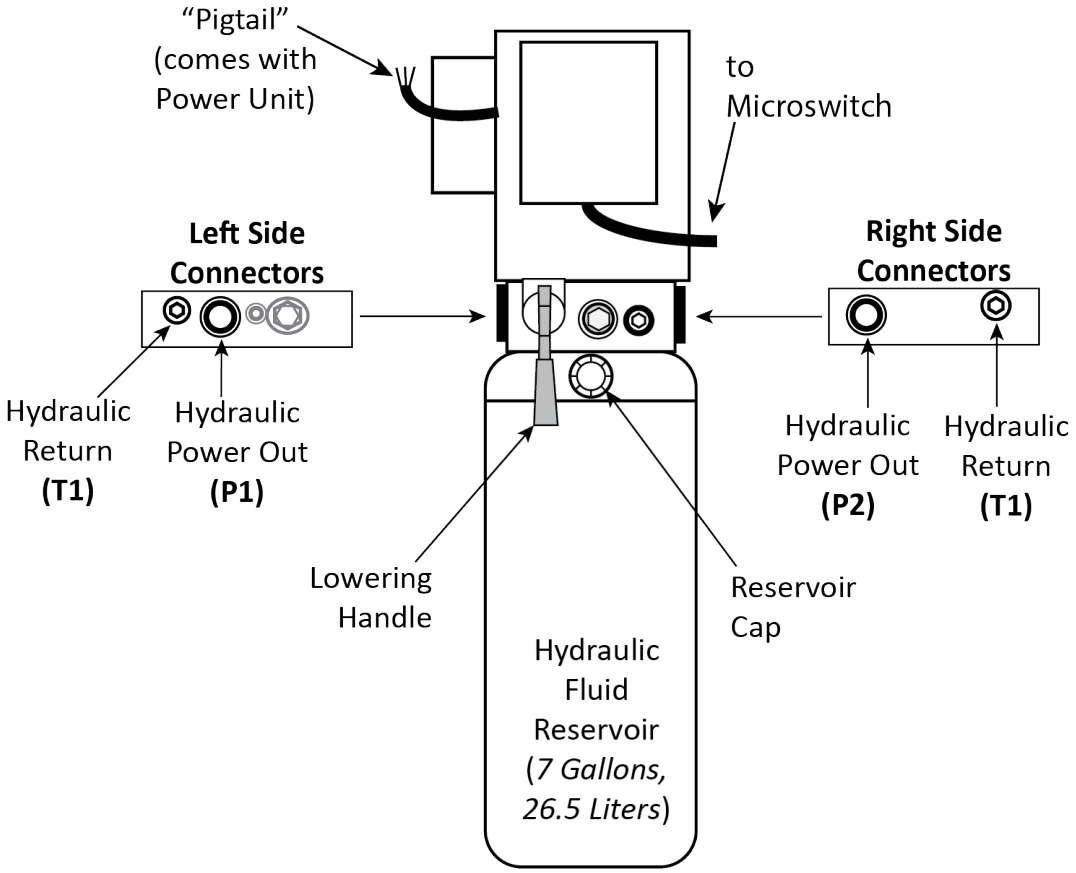

Not drawn to scale. Not all components shown. T1/T2 or CV1/CV2 represents the Hydraulic Return; P1/P2 represents the Hydraulic Power Out.

The following drawing shows the configuration for **Power Unit 2**.

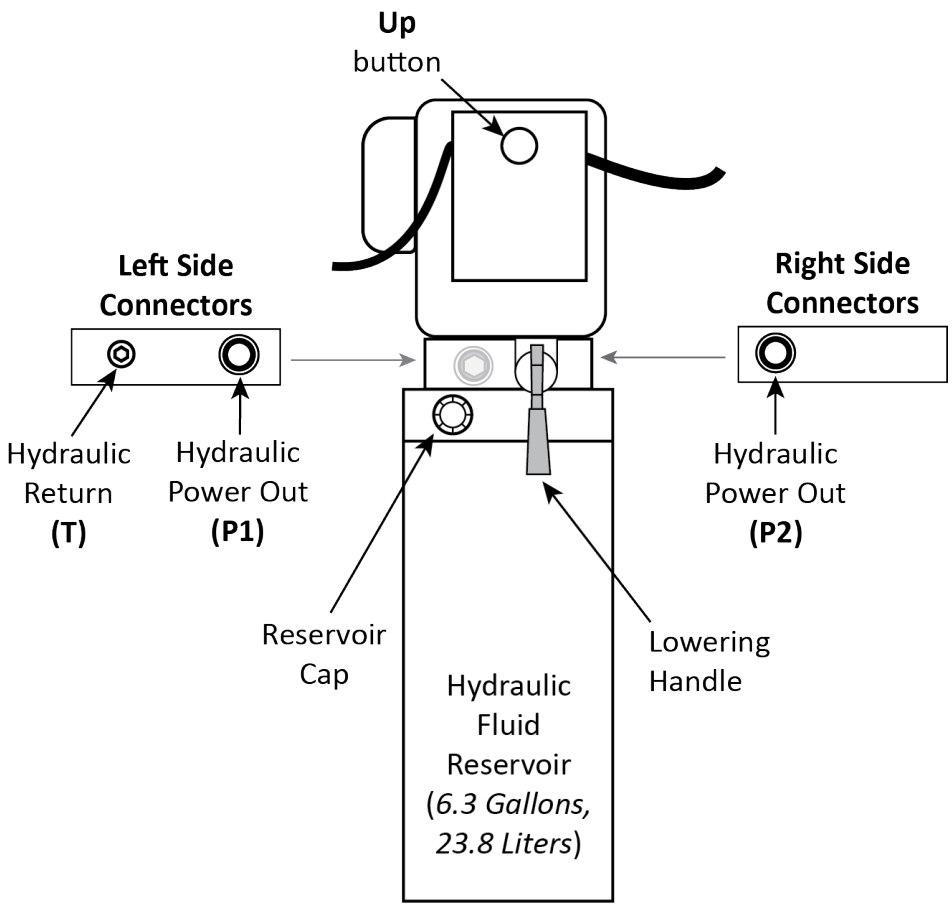

Not drawn to scale. Not all components shown. Not all sides shown.

To connect the Lift to a power source:

1. Have a certified, licensed Electrician connect an appropriate plug to the wiring, coming out of the top of the Power Unit (called the "Pigtail" in the drawings above).

   The plug is ***not*** supplied with the Lift.

2. Connect the power source cable to the plug you just connected.

   Refer to **Wiring Diagrams** for proper wiring information.

   The power source cable is ***not*** supplied with the Lift.

3. Wire the Microswitch to the incoming power source per the following drawing.

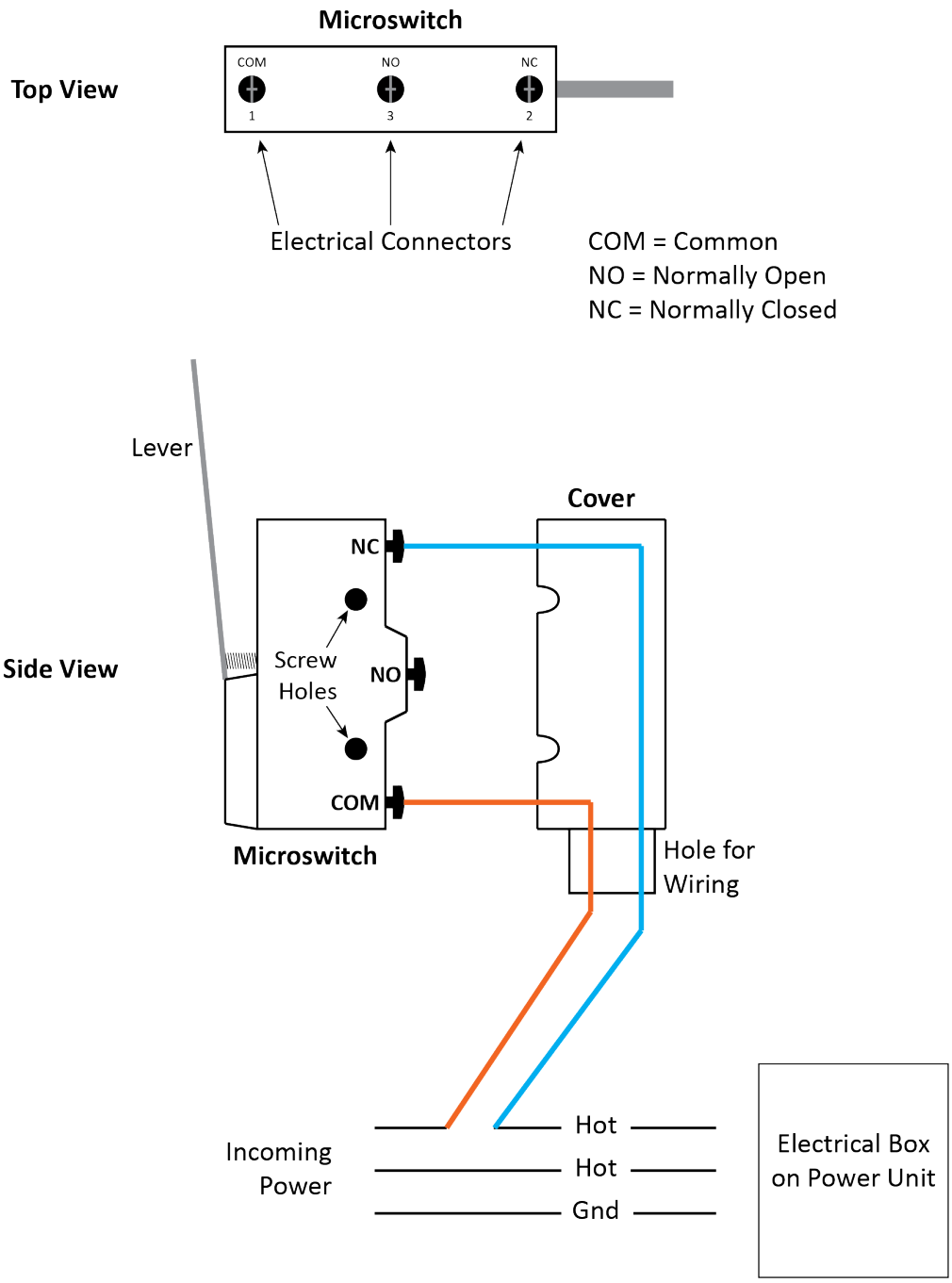

4. Double check to make sure the Hydraulic Fluid Reservoir has an adequate supply of fluid.

   Do not run the Lift without adequate supply of Hydraulic Fluid; you will damage the Power Unit.

Installing a Power Disconnect Switch

⚠ **WARNING** A main Power Disconnect Switch is ***not*** provided with this equipment.

A Power Disconnect Switch is a National Electrical Code (NEC) requirement. They are designed to interrupt electrical power in the event of an electrical circuit fault, emergency situation, or when equipment is undergoing service or maintenance.

BendPak strongly recommends that you install a Power Disconnect Switch that is properly rated for the incoming power.

⚠ **DANGER** All wiring ***must*** be performed by a licensed, certified Electrician.

Your Power Disconnect Switch must be readily accessible and installed so that it is in easy reach of the Lift operator. It must be clearly and legibly marked to indicate its purpose.

The drawing to the right shows a toggle Power Disconnect Switch between the Lift's power source and its Power Unit. A quick flip of the switch immediately cuts power to the Lift.

Make sure to have a certified Electrician install the Power Disconnect Switch.

Make sure the electrician selects a ***UL-listed*** Power Disconnect Switch.

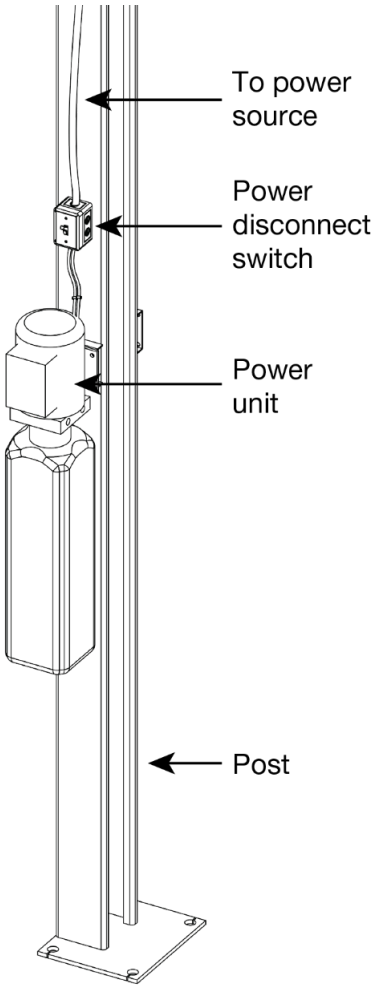

Installing a Thermal Disconnect Switch

⚠ **WARNING** The Lift's motor does ***not*** have thermal overload protection.

Connect a motor Thermal Disconnect Switch or overload device that will make sure the equipment shuts down in the event of an overload or an overheated motor.

⚠ **DANGER** All wiring ***must*** be performed by a licensed, certified Electrician.

High running amps that exceed the motor's full load amps (FLA) rating may result in permanent damage to the motor.

BendPak strongly recommends you ***not*** exceed the rated duty cycle of the Lift's motor.

Anchoring the Posts

If you have not done so already, you need to anchor the Lift's four Posts. Install one Anchor Bolt in each corner of each Base Plate, 4 per Post, 16 Anchor Bolts total.

Concrete specifications are:

- **Depth**: 6 inches thick
- **PSI**: 3,000 PSI, minimum
- **Cured**: 28 days, minimum

Anchor Bolt specifications are:

- **Length**: 6.3 inches
- **Diameter**: .75 inch
- **Anchor torque**: 110 – 150 foot pounds

⚠ **WARNING** Your Concrete and Anchor Bolts ***must*** meet these specifications. Only install your Lift on a Concrete surface. If you install a Lift on asphalt or any other surface, or your Concrete or Anchor Bolts do not meet these specifications, it could lead to product damage, vehicle damage, personal injury, or even death.

BendPak Lifts are supplied with installation instructions and concrete fasteners meeting the criteria as prescribed by the American National Standard "Automotive Lifts – Safety Requirements for Construction, Testing, and Validation" ANSI/ALI ALCTV-2006.

⚠ **WARNING** Use only the Anchor Bolts that came with your Lift. If you use components from a different source, you void your warranty and compromise the safety of everyone who installs or operates the Lift.

Lift buyers are responsible for conforming to all regional, structural, and seismic anchoring requirements specified by any other agencies and/or codes, such as the Uniform Building Code and/or International Building Code.

To anchor the Posts:

1. Locate the hardware you will need: four Anchor Bolts, four Nuts, and four washers ***per Post***.
2. Using the Base Plates as guides, drill the holes 5 inches deep—one hole in each corner of the Base Plate, so four holes total per Base Plate.

Important: Do ***not*** drill all the way through the concrete; if you punch completely through the slab, you compromise the holding strength of the Anchor Bolt once put into place.

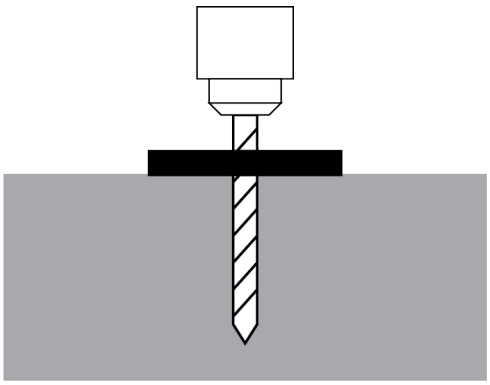

Go in straight, in the center of the hole; do not let the drill wobble.

Use a carbide bit (conforming to ANSI B212.15-1994).

The diameter of the drill bit must be the same as the diameter of the Anchor Bolt. So if you are using a ¾ inch diameter Anchor Bolt, for example, use a ¾ inch diameter drill bit.

3. Vacuum each hole clean.

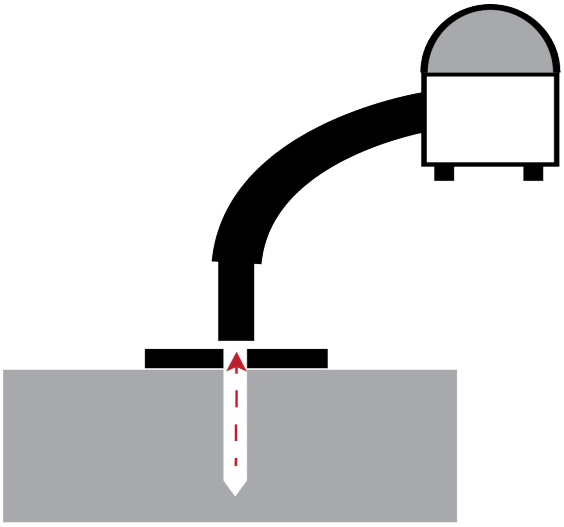

BendPak recommends using a vacuum to clean the hole. You can also use a wire brush, hand pump, or compressed air; just ***make sure to thoroughly clean each hole***.

Do ***not*** ream the hole. Do ***not*** make the hole any wider than the drill bit made it.

Important: The holding strength of an Anchor Bolt is partially based on the how cleanly the Expansion Sleeve presses against the Concrete. If the hole is dirty, the Expansion Sleeve does not press as cleanly, which means less holding strength. If the hole is too wide, the Expansion Sleeve does not press against the Concrete with as much force, again resulting in less holding strength.

4. Make sure the Washer and Nut are in place, then insert the Anchor Bolt into the hole.

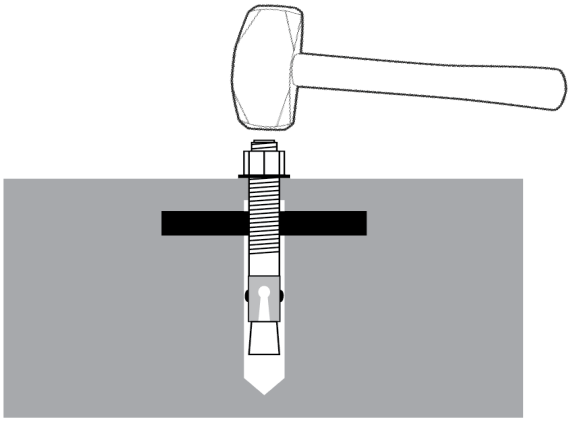

The Expansion Sleeve of the Anchor Bolt may prevent the Anchor Bolt from passing through the hole in the Base Plate; this is normal. Use a hammer or mallet to get the Expansion Sleeve through the Base Plate and into the hole.

Even using a hammer or mallet, the Anchor Bolt should only go into the hole part of the way; this is normal. If the Anchor Bolt goes all the way in with little or no resistance, the hole is too wide.

Once past the hole in the Base Plate, the Anchor Bolt eventually stops going down into the hole as the Expansion Sleeve contacts the sides of the hole; this is normal.

5. Hammer or mallet the Anchor Bolt the rest of the way down into the hole.

   Stop when the Washer is snug against the Base Plate.

6. Plumb each Post; install any needed Shims.

   Do not shim a Post more than half an inch using the provided Shims. A maximum of 2 inches is possible by ordering optional Shim Plates. Contact BendPak at **(800) 253-2363**, extension 191 to order. Please have the model and serial number of your Lift available.

   Take your time while plumbing and shimming the Posts; ***it is important to make the Lift level as possible***.

7. Wrench each Nut ***clockwise*** to the recommended installation torque, 110 – 150 foot pounds, using a Torque Wrench.

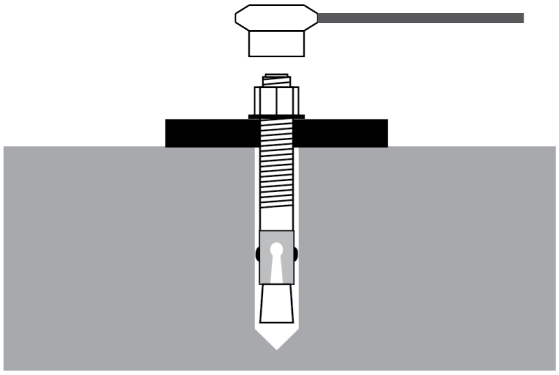

Important: Do ***not*** use an impact wrench to torque the Anchor Bolts.

Wrenching the Nut forces the Wedge up, forcing out the Expansion Sleeve and pressing it tightly against the Concrete.

Final Leveling

The following procedure describes how to fine tune how level your Lift is. The goal is that the four Safety Locks on each Platform engage at the same time.

To do final leveling on the Lift:

1. Make sure the Platform Switch Valve is turned on for the Upper Platform.
2. Raise the Upper Platform to the first Lock position (the primary Safety Locks, not the Slack Safety Locks).
3. Use a transit level or other leveling mechanism to evaluate how level the Posts and Runways are to each other.
4. If you need to adjust a Runway, use the Top Nut and Stop Nut on the Top Cap of each Post to make adjustments to the Ladder in that Post (which impacts the levelness of the Runway and when the Safety Locks engage).
5. Raise the Platform to about mid height, listening as the Safety Locks engage.

   If the Safety Locks are engaging at the same time, no further adjustments are necessary.

   If the Safety Locks are not engaging at the same time, check the leveling, make necessary adjustments, and then raise the Lift again and listen as the Safety Locks engage.
6. Leave the Upper Platform engaged on a Safety Lock, then switch the Platform Switch Valve on for the Lower Platform.
7. Now repeat steps 1-4 for the *Lower* Platform.

   When you are satisfied the Lift is level, firmly secure the Nuts at the top of each Post.

Installing Accessories

The accessories available for your Lift include

- **Runway Covers**. Installed underneath the Runways. Covers the Cables and Hydraulic Cylinder.
- **Tire Stops**. Installed at the Front of the Lift. Holds the front Tires of the Vehicle in position.
- **Drive-up Ramps**. Installed at the Rear of the Lift. Allows Vehicles to be easily driven onto the Runways.

Runway Covers

Each Runway has three Covers that go on the underside. They cover the Cables, Lines, and Hydraulic Cylinder on the Powerside Runways; there is nothing underneath the Offside Runways.

Note: The longer Runway Covers go with the Upper Platform, and the shorter Covers with the Lower Platform.

To install the Runway Covers:

1. Locate the Covers that come with your Lift, then push the Covers up into place so that they sit on the inside Rails of the Powerside Runway.

   The Runway Covers are made out of plastic and easily bend.

2. Move the Covers around until the Cables and the Hydraulic Cylinder are fully covered.
3. Repeat steps 1 and 2 for the other Powerside Runway and the two Offside Runways.

Tire Stops

Each Platform has two Tire Stops that go at the Front of the Lift. They prevent the tires of your Vehicle from going too forward.

The Lower Platform uses Tire Stops with Stop Weights on the underside of the Tire Stop; the Stop Weights make sure that the Tire Stops rest flat on the Platform when the Upper Platform is fully lowered, but allows the Tire Stop to spring back into position when the Upper Platform is raised.

Use the standard Tire Stops (without Stop Weights) for the Upper Platform.

To install the Tire Stops:

1. Locate the two Tire Stops, Pins, and Rotor Clips needed.
2. Put one Tire Stop in position in between the Tubes on the front of the Platform, then put the Pin through the Tire Stop and the Tubes attached to the Runway.

   Secure the Tire Stop with a Rotor Clip on either end of the Pin

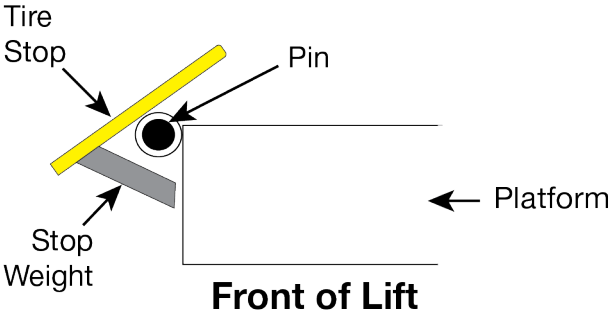

Not drawn to scale. Not all components shown. Side view. The Tire Stops with Stop Weights go with the Lower Platform only.

3. Repeat steps 1 and 2 for the remaining three Tire Stops.

   Make sure to chock the Vehicle's Rear Tires when you position it in place on the Runways.

Drive-up Ramps

Each Platform has two Drive-up Ramps that go at the Rear of the Runways; The Upper Platform uses extra-long Drive-up Ramps (48 inches) that allow Vehicles to be easily driven onto the Runways. The Lower Platform has shorter Drive-up Ramps (36 inches).

To install the *Upper* Drive up Ramps:

1. Find the required components for the Upper Platform: two Ramps, two Ramp Pins, and four Rotor Clips.
2. Put a Ramp into position at the rear of the Runway, with the Ramp tube aligned between the two tubes attached to the Runway.
3. Slide a Ramp Pin through the three tubes, then put two Rotor Clips on both ends of the Ramp Pin.

Note: The Ramps are heavy and awkward, so you may want to consider having two people install them; one to hold the Ramp, the other to put the components into place.

4. Repeat steps 2 and 3 for the other Ramp.

To install the *Lower* Drive-up Ramps:

1. Find the required components for the Lower Platform: two Ramps, two Hinges, two Pins, and four Rotor Clips.
2. Put a Hinge into position between the Tubes at the Rear of the Runway, then slide a Pin through the Hinge and Tubes.

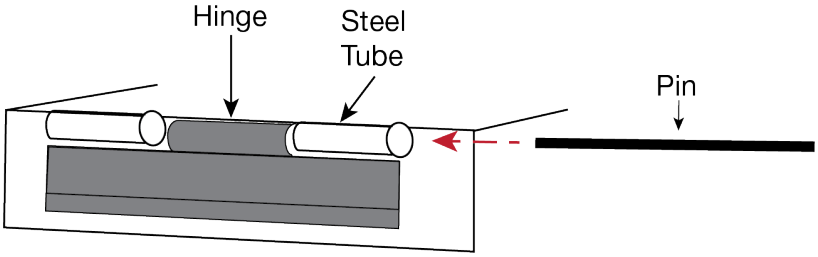

Not to scale. Not all components shown. Front View.

3. Place the Ramp in the Lip of the Hinge, then secure two Rotor Clips on either end of the Pin.

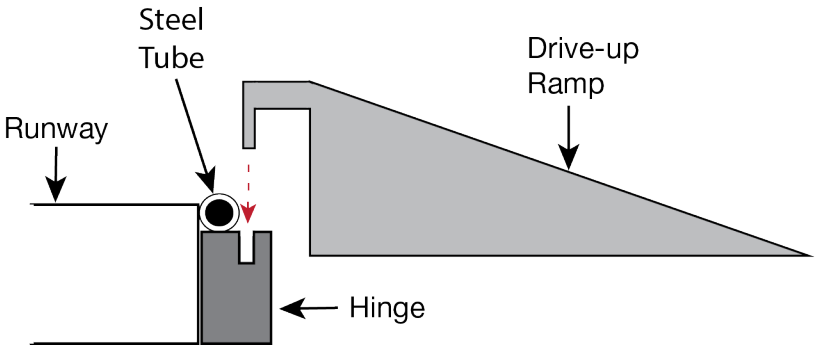

Not to scale. Not all components shown. Side View.

4. Repeat steps 2 and 3 for the other Ramp.

Installing the Crossbeams

To prevent from interfering with some of the other procedures in your Lift setup, installing the Crossbeams is one of the last steps to complete before you begin operating your Lift; that procedure is described here.

Your Lift comes with four Crossbeams: two Crossbeams connect the Offside Posts and the other two connect the Powerside Posts. The Crossbeams add extra structural stability to your Lift. Each Post has two Mounting Brackets already attached to each Post; you will need to bolt the Crossbeams to each Mounting Bracket.

The following drawing shows the orientation of the Crossbeams.

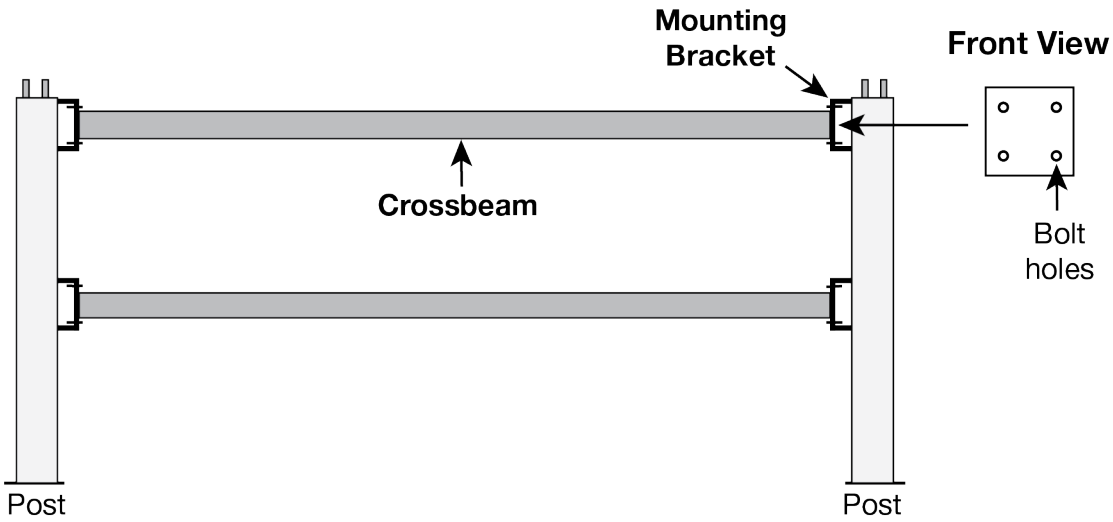

Not drawn to scale. Not all components shown. Runways not shown. Side view.

To install the Crossbeams:

1. Pick a Crossbeam to start with, then align the Crossbeam holes on either end to the Mounting Brackets on the Post.

   The Crossbeams are interchangeable, so it does not matter which one you use.

⚠ **WARNING** The Crossbeams are heavy; you will need at least one person hold a Crossbeam while another person bolts it into place.

2. Connect the Crossbeam on both ends to the Mounting Brackets using a Bolt, Washer and Nut for each hole, then tighten until secure.
3. Repeat steps 2 and 3 for the remaining three Crossbeams.

Lubricating the Lift

There are several lubrication points on each Platform. All of them on each Platform are where Sheaves are located:

- **Inside of the Crosstube Gussets**. One on each side of the Crosstube Gusset facing the inside, for a total of eight.
- **Under the Cable Sheaves**. One under each twin Cable Sheave under the Front Powerside Runway (also the twin Cable Sheaves in the Pulley Box for Upper Platform only) and another two under the two Rear Sheaves under the Rear Powerside Runways.

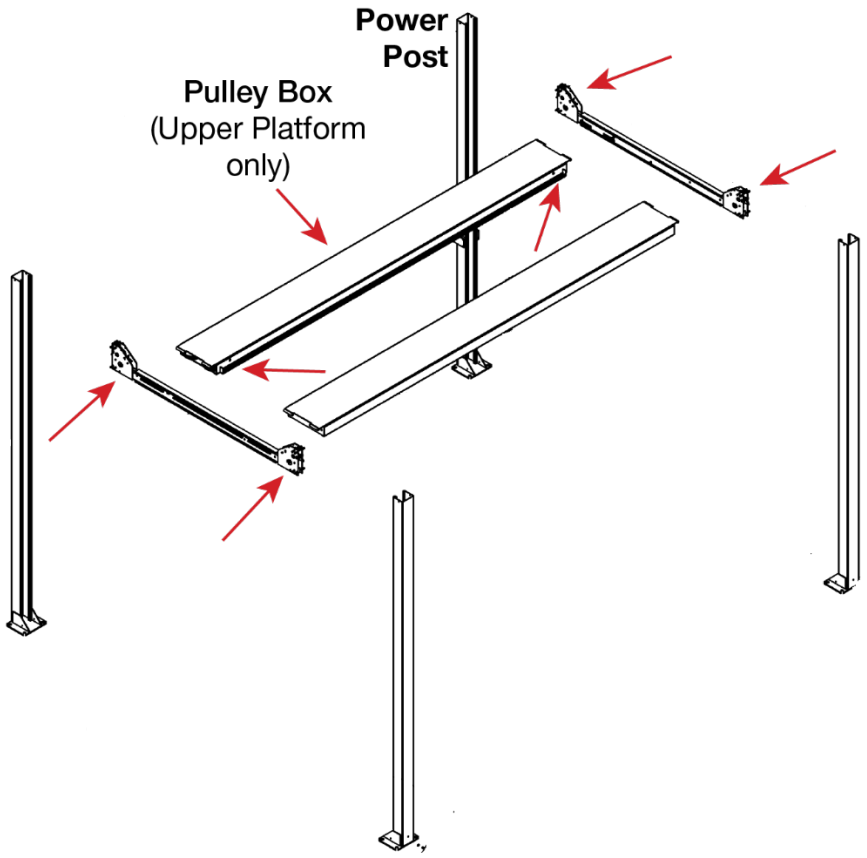

Put a small amount of white lithium grease or similar on each lubrication point before you use the Lift and monthly after putting the Lift into service.

Bleeding the Hydraulic Cylinder

The Hydraulic Cylinders on the Lift are self-bleeding, which means that in most cases any air in the system can be removed by raising and lowering each Platform a few times; “bleeding” the Hydraulic System of the unwanted air.

⚠ **WARNING** Before performing any maintenance on your Lift (for example, bleeding the Hydraulic Cylinder or adding Hydraulic Fluid), make sure both Platforms are fully lowered (the Lower Platform on ground level and the Upper Platform fully resting on the Stop Blocks) and the power source has been completely disconnected. If your organization has Lockout/Tagout policies, make sure to implement them after connecting to the power source.

Symptoms of air in the Hydraulic System include Runways moving erratically and/or making odd noises. These could be caused by other situations; refer to **Troubleshooting** for more information.

To bleed the Hydraulic System:

1. Raise and lower the Runways up to six times; ***pause for at least one minute between each cycle***.

   The Lift’s motor cannot run continuously; it is designed for regular use, but not continuous use.

2. Watch the Runways as you raise and lower them, one Platform at a time.

   When the Lift stops moving erratically or stops squeaking, you can stop the bleeding process.

3. Check the Hydraulic Fluid reservoir on the Power Unit.

   Bleeding the Hydraulic System may significantly lower the amount of Hydraulic Fluid in the reservoir.

4. Add additional Hydraulic Fluid if necessary.

   You can damage your motor by running it without enough Hydraulic Fluid in the reservoir.

If your Lift is still moving erratically or making odd noises after bleeding the Hydraulic System, refer to **Troubleshooting** for more information.

Test the Lift

BendPak strongly recommends doing an Operational Test of your Lift with a standard Vehicle on each Platform before starting normal service (a typical Vehicle is not required, but is recommended).

During the Operational Test, watch the Lift and its components and check for proper installation and operation. If you run into an issue that does not go away, refer to **Troubleshooting**.

Note: Residual air in the Hydraulic Systems can cause the Lift to shake, move erratically, or squeak when you start using it; this is normal. If it happens, do not worry; it will go away as the Hydraulic System is self-bleeding. If it does not go away soon, try bleeding the Cylinder of air. If it still does not go away, refer to **Troubleshooting** for additional information.

To test your Lift:

1. Before you start using your Lift, make sure to check for people, pets, or objects that might be in the path of the Lift as you raise and lower it.
2. Drive the Vehicle onto the Platform. Try to center the Vehicle's tires in the middle of each Runway.

   Put the Vehicle into park, put on the parking brake, put it in gear if it is a manual transmission, and chock the wheels.
3. Make sure the Knob on the Platform Switch Valve is turned on for the Platform you want to operate.
4. Press and hold the **Up** button.
5. After the Runways pass three or four Safety Locks (you will hear them), release the **Up** button.
6. Press and hold the pushbutton on the Pushbutton Air Valve, then press and hold the Lowering Handle.

   The Runways back down onto the Safety Locks they just passed.

⚠ **CAUTION** ***Never leave the Lift without making sure that all four Safety Locks have engaged on locking positions at the same height***. If one of the four Safety Locks do not fully engage, the Platform will not be level and you could risk damaging any Vehicles sitting on or underneath the Platforms.

7. Press the **Up** button for a few seconds to disengage the Runways from the Safety Locks, then release the **Up** button.
8. Press and hold the pushbutton on the Pushbutton Air Valve, then press and hold the Lowering Handle.
9. When the Platform gets to the ground, release the Lowering Handle.
10. Wait for one minute.

⚠ **CAUTION** Always take a break between cycles. The Power Unit's motor is ***not*** constant duty; it cannot be run continuously.

11. Repeat the process, this time raising the Platform to a higher Safety Lock.
12. If the Lift is working without shaking, moving erratically, or squeaking, there is no need to repeat the procedure.

    If the Lift is shaking, moving erratically, or squeaking (which is normal during the start-up period), repeat the procedure a couple more times, with at least a one-minute break between cycles.

If you continue to have issues, refer to **Troubleshooting** for assistance.

Final Checklist

Make sure these things have been done ***before*** putting the Lift into service:

- Review the **Installation Checklist** to make sure all steps have been performed.
- Make sure the Power Unit is getting power from the power source.
- Check the Hydraulic Fluid reservoir on the Power Unit; it must be full of approved Hydraulic Fluid or automatic transmission fluid. ***You can damage the motor by running it without enough fluid.***
- Check the Hydraulic System for leaks.
- Make sure all four Posts are properly anchored, shimmed, level, and stable.
- Make sure all Cables are properly seated in their Sheaves.
- Make sure all Safety Locks are operating normally.
- Make sure the backup Slack Safety Locks are ***not*** engaged.
- Make sure a copy of the *Installation and Operation Manual* is left with the Lift.
- If it has not been done already, perform an Operational Test of the Lift with a typical vehicle. Refer to **Performing an Operational Test**.

Operation

This section describes how to operate your Lift.

Safety Considerations

Do the following every time ***before*** you raise a vehicle on your Lift:

- **Check the Lift**. Walk all the way around the Lift, checking for any missing, heavily worn, or damaged parts. Do not operate the Lift if you find any issues; instead, take it out of service, then contact your dealer, email **techsupport@bendpak.com,** or call **(800) 253-2363**.
- **Check the area**. Keep the area around and under the Lift clean and free of obstructions; anything that could cause a problem. Do not forget to check ***above*** the Lift. If you find an obstruction, move it out of the way. If you find any other issues, resolve them before using the Lift. Do not allow any people or animals within 30 feet of the Lift while it is in motion.
- **Check the operators**. Make sure everyone who is going to operate the Lift has been trained in its use, has read the labels on the unit, and has read the manual. Only the operator at the Controls should be within 10 feet of the Lift when it is in motion.

  Do not allow children to operate the Lift. Do not allow anyone under the influence of drugs, alcohol, or medication to operate the Lift. Do not allow any unauthorized personnel to operate the Lift.
- **Check for safety**. Make sure everyone who is going to be walking near the Lift is aware of its presence and takes appropriate safety measures. Only put vehicles on the Runways.

  When raising a vehicle, do not leave it until the Platform is engaged on a Safety Lock. When lowering the Lift, do not leave it until it is on the ground.
- **Check the vehicle**. Never exceed the Lift's weight rating. Do not allow people inside a vehicle you are going to raise. Double check you have everything you need out of the vehicle before raising the Lift. Make sure the vehicle is not overbalanced on either end or either side.

Using the Controls

The Controls for the Lift include:

- **Platform Switch Valve**. Turn the Knob to control the Platform you want to move. Goes on the Hydraulic Out Port on the Power Unit, with a Hydraulic Line on either end.

  To activate the desired Platform: If you want to move the Upper Platform, turn the Knob so that the arrows are facing the Hydraulic Line (the one that controls that designated Platform) on the Platform Switch Valve.

  Before you begin to raise or lower one of the Platforms, always double check that you have the Knob turned correctly for the Platform you want to move.

- **Up button**. Press and hold to raise the Runways. Located near the top of the Power Unit.

  To put Runways onto a Safety Lock position: Raise the Runways a little above where you want them, then press and hold the Lowering Handle to back the Runways down onto the Safety Locks position (do not press and hold the pushbutton on the Pushbutton Air Valve). When the Runways stop going down, they are engaged on a Safety Lock.

  Before leaving the Lift, make sure all four corners are engaged on their Safety Locks.

- **Lowering Handle**. Press and hold to lower the Runways. Located in the middle of the Power Unit, the Lowering Handle is long and has a ball at the end.

  To lower raised Runways down to the ground: ***press and hold*** the pushbutton on the Pushbutton Air Valve first, then ***press and hold*** the Lowering Handle.

  Watch the Runways as they go down to make sure they are coming down evenly. If they are not, stop lowering the Lift and troubleshoot the problem.

⚠ **WARNING** Only leave your Platforms either engaged on a Safety Lock position or fully lowered.

- **Pushbutton Air Valve**. Press and hold the pushbutton on the Pushbutton Air Valve as part of the process to lower the Runways. Located on one side or the other of the Power Unit (depending on where it was installed). Pressing and holding the pushbutton on the Pushbutton Air Valve disengages the Safety Locks, which is needed to lower the Runways.

Raising and Lowering Vehicles

Keep the following in mind when operating your Lift:

- **Be safe**. Make sure to check for people, pets, and objects that might be in the path of the Lift as you raise or lower it. If there is something in the way, stop the Lift and move it out of the way. Watch the Lift carefully as it raises and lowers.

⚠ **DANGER** Pay careful attention when you are raising or lowering your Lift. If a person or pet gets stuck under the Lift, they could be injured or, in rare cases, killed.

- **Platforms operate independently**. Each Platform on the Lift operates independently; be sure to double check that the Knob on the **Platform Switch Valve** is turned in the direction of the Platform you want to move.
- **The Power Disconnect Switch exists for a reason**. We hope you never have to use it, but if something unexpected happens, use the **Power Disconnect Switch** to immediately stop the Lift from moving.
- **Get what you need out of the vehicle before lifting it**. It is frustrating to raise a vehicle and then realize you left something inside. ***Never raise your Lift with people in the vehicle***.
- **Make sure the vehicle is balanced**. If there is extra weight on one end or the other, remove it or balance it before raising the vehicle.
- **Center the vehicle's wheels on the Runway**. Centered wheels keep the vehicle balanced. Do not leave a vehicle with its tires on the Aluminum Decks.

To raise a Vehicle on the *Upper* Platform:

1. Make sure the Platform Switch Valve is turned on for the Upper Platform.

   The arrows on the Platform Switch Valve need to be facing the side that you installed the Hydraulic Line on the Switch that controls the Upper Platform.

2. Make sure the Platform is fully lowered. If they are not, move them down onto the Stop Blocks.
3. Drive a vehicle onto the Runways.

   Make sure all four wheels are fully on the Runways, as close to the center of the Runways as possible.

4. Put the vehicle into park and put on the parking brake. If your vehicle has a manual transmission, place the transmission in first gear.
5. Chock the tires.
6. Press the **Up** button on the Power Unit.

   NOTICE As the Platform raises, you will hear clicking sounds, which are the sounds of the Safety Locks hitting the locking positions and then passing them by; these sounds are normal.

7. When the Platform gets to the desired height, go up a little bit more, then release the **Up** button and press and hold the Lowering Handle.

   The Platform backs down onto the most recently passed Safety Lock.

Important: How do you know if one of the four Safety Locks has, for some reason, not engaged? If this happens, the non-engaged corner of the Lift will continue to go down, while the others stay where they are. This results in a Platform that is not flat. Always check to make sure that all four Safety Locks are engaged on locking positions of the same height; you know they are if the Platform is level.

⚠ **WARNING** Only leave the Platform either engaged on the same Safety Locks or fully lowered.

8. With the Platform engaged on a Safety Lock, check around the Lift to make sure that everything looks good.

   If you see anything wrong, fix it before anyone gets near the Runways or goes under them.

To raise a Vehicle on the *Lower* Platform:

1. Before driving a Vehicle onto the Lower Platform, make sure the Upper Platform is engaged on a locking position.

⚠ **CAUTION** Make sure you have enough underclearance for the Vehicle going on the Lower Platform; you do not want to accidentally scrape or damage your Vehicle's roof by contacting the underside of the Upper Platform.

2. Turn the Knob on the Platform Switch Valve to control the Lower Platform.
3. Drive the Vehicle onto the Platform.

   Make sure all of the tires are resting on the Platform; Do ***not*** leave a vehicle with its tires on the Aluminum Decks.

4. Put the Vehicle into park and put on the parking brake. If your Vehicle has a manual transmission, place the transmission in first gear.
5. Chock the tires.
6. Walk around the Lift to make sure no obstructions will interfere with the Vehicle being lifted.
7. Press and hold the **Up** button.

Important: Make sure to leave enough overhead clearance between your Vehicle and the Safety Shutoff Bar (on the underside of the Upper Platform); when you are ready to lower your vehicle, you will first need to ***raise*** the Lower Platform to disengage off the Safety Locks. If there is not enough room, it may be difficult for the Platform to disengage from the Safety Locks without your Vehicle contacting the Safety Shutoff Bar.

8. When the Lower Platform is just past the desired locking position, release the **Up** button, then Press and hold the Lowering Handle.
9. Once downward movement stops, release the Lowering Handle.

   Make sure that the Lower Platform is on a Locking position before driving a vehicle under it.

⚠ **WARNING** Never walk under raised Platforms—always walk around and stay clear at all times.

Lowering both Platforms:

1. Double check that no one except the Lift operator is within 10 feet of the Lift.
2. Check that the Platform Switch Valve is turned on for the Lower Platform, then press the **Up** button to disengage the Platform from the Safety Locks.

   After a second or two, release the **Up** button.
3. Press and hold the Pushbutton Air Valve ***and*** the Lowering Handle *at the same time*.

   The Lower Platform lowers while the Upper Platform stays in place.

⚠ **CAUTION** Never lower a Platform if there is anything underneath it. Always double check that the area underneath the Platform you are lowering is completely free of all obstructions.

4. Lower the Lower Platform all the way to the ground, then release the Pushbutton Air Valve and the Lowering Handle.
5. Remove the Tire Chocks, then carefully drive the vehicle off the Lower Platform.
6. Turn the Knob on the Platform Switch Valve to control the Upper Platform, then press and hold the **Up** button to lift the Platform off of its Safety Locks.
7. After a second or two, release the **Up** button.
8. Press and hold the Pushbutton Air Valve ***and*** the Lowering Handle *at the same time*.

   The Upper Platform lowers.
9. Lower the Upper Platform all the way down until it rests on the Stop Blocks.
10. When the Upper Platform is fully resting on the Stop Blocks, release the Pushbutton Air Valve and the Lowering Handle.
11. Remove the Tire Chocks, then carefully drive the vehicle off of the Runways.

Maintenance

⚠ **DANGER** Before performing any maintenance on your Lift, make sure it is completely disconnected from power. If your organization has Lockout/Tagout policies, make sure to implement those procedures after connecting to the power source.

To maintain your Lift:

- **Daily**: Keep the Lift clean. Wipe up any spills, clean any dirt.
- **Daily**: Make a visual inspection of all moving parts and check for damage or excessive wear. Replace any damaged or worn parts before using the Lift.

⚠ **DANGER** Do not use the Lift if the Cables are damaged or extremely worn. If a vehicle is raised when you notice the damage or extreme wear, very carefully lower the vehicle to the ground. When the Lift is on the ground, take it out of service, disconnect it from power, and make arrangements to fix the damage or wear.

- **Daily**: Make sure all Safety Locks are in good operating condition. Do not use your Lift if the Safety Locks are damaged or excessively worn.
- **Monthly**: Check all labels on the Lift. Replace them if they are illegible or missing.
- **Monthly**: Grease all lubrication points on the Lift.
- **Monthly**: Check Hydraulic Fluid levels. Refill if low.
- **Monthly**: Lubricate the wire rope (Cables). Use a wire-rope lubricant such as 90-WT gear oil or ALMASOL® Wire Rope Lubricant.
- **Monthly**: Check cable connections, bolts, and pins for proper mounting and torque.
- **Every two months**: Check all Anchor Bolts to make sure they are properly torqued. If they are loose, tighten them.
- **As needed**. Take the Lift out of service and then replace the Cables if there are signs of damage or extreme wear.

⚠ **WARNING** Do not operate your Lift if you find maintenance issues; instead, take the Lift out of service, then contact your dealer, visit **bendpak.com/support**, email **techsupport@bendpak.com**, or call **(800) 253-2363**.

Wire Rope Inspection and Maintenance

Your Lift's Cables, which are wire rope, should be inspected regularly:

- Wire rope should be replaced when there are visible signs of damage or extreme wear. ***Do not use the Lift if it has damaged or worn Cables; you must take it out of service!***
- Wire rope should be maintained in a well-lubricated condition at all times.

  Wire rope is only fully protected when each wire strand is lubricated both internally and externally. Excessive wear shortens the life of wire rope.

  Use a wire-rope lubricant that penetrates to the core of the rope and provides long-term lubrication between each individual strand, such as 90-WT gear oil or ALMASOL® Wire Rope Lubricant.

  To make sure that the inner layers of the rope remain well lubricated, lubrication should be done at least every three months during normal operation.
- All Sheaves and guide rollers that contact moving wire rope should be given regular visual checks for surface wear and lubricated to make sure they run freely. This should be done every three months during normal operation.

  For all sheave axles, use standard wheel bearing grease. For all Sheaves and/or guide rollers, use 90-WT gear oil or a similar heavy lubricant, applied by any method including pump/spray dispensing, brush, hand, or swabbing.
- **How often should you inspect?**

  Wire rope should be visually inspected at least once each day when in use, as suggested by American Petroleum Institute's Recommended Practice 54 guidelines.

  Any wire rope that meets the criteria for removal must be immediately replaced.
- **When should you replace wire rope due to broken wires?**

  Wire rope should be removed from service if you see six randomly distributed broken wires within any one lay length or three broken wires in one strand within one lay length.
- **Are there other reasons to replace your wire rope?**

  Yes:

  - Corrosion that pits the wires and/or connectors
  - Evidence of kinking, crushing, cutting, bird-caging, or a popped core
  - Wear that exceeds 10% of a wire's original diameter
  - Evidence of heat damage
- **How do you find broken wires?**

  a. Relax your rope to a stationary position and move the pick-up points off the Sheaves. Clean the surface of the rope with a cloth — a wire brush, if necessary — so you can see any breaks.

  b. Flex the rope to expose any broken wires hidden in the valleys between the strands.

  c. Visually check for any broken wires. One way to check for crown breaks is to run a cloth along the rope to check for possible snags.

  d. With an awl, probe between wires and strands and raise any wires that appear loose. Evidence of internal broken wires may require a more extensive rope examination.

Troubleshooting

This section describes how to troubleshoot your Lift.

⚠ **WARNING** If your Lift is not functioning correctly, you must take it out of service until it is fixed. ***All repair work must be done by qualified personnel***.

Runways do not raise or do not lower, once raised.	Make sure there is sufficient Hydraulic Fluid in the reservoir. Make sure there is no air in the Hydraulic System. Make sure none of the Hydraulic Lines are pinched or leaking. Make sure the Power Unit is getting power. If the Hydraulic Fluid is dirty, replace it with clean fluid. Make sure Lift is not overloaded.
Runways do not lower past the nearest Safety Lock even when pressing and holding the pushbutton.	Problem with the Air Lines; check to make sure all sections of the Air Line are connected and not leaking.
One corner of a Platform is lower than the other three corners.	The Safety Lock on the lower corner is not engaged. Raise the Runways up, then lower them down onto the Safety Locks. Check to make sure all four Safety Locks are engaged on Safety Locks of the same height.
Runways move erratically or squeak when in use.	Move the Runways up and down a few times to flush any residual air from the Hydraulic System. Make sure to pause for at least 2 minutes between cycles.
Runways do not stay up.	Check for leaking Hydraulic Fluid. Make sure the Runways are left on their Safety Locks.
Motor not running.	Check the connection to the power source; make sure it is plugged in and of the appropriate voltage. Check the wiring diagram.
Hydraulic Fluid is dirty.	Replace the dirty fluid with clean, approved Hydraulic Fluids, such as Dexron III, Dexron VI, Mercon V, Mercon LV, Shell Tellus S4 / S3 / S2, or comparable.
Runways make odd noises.	Lubricate the bushings on the sheaves on the sides of the Crosstubes using white lithium grease. If the Lift is new, a break-in period may be needed; run the Lift several times each day. If the noises persist, contact BendPak Support.

If you continue to have issues with your Lift, take it out of service, then contact your dealer, go to **bendpak.com/support**, email **techsupport@bendpak.com**, or call **(800) 253-2363**.

Wiring Diagrams

Power Unit 1

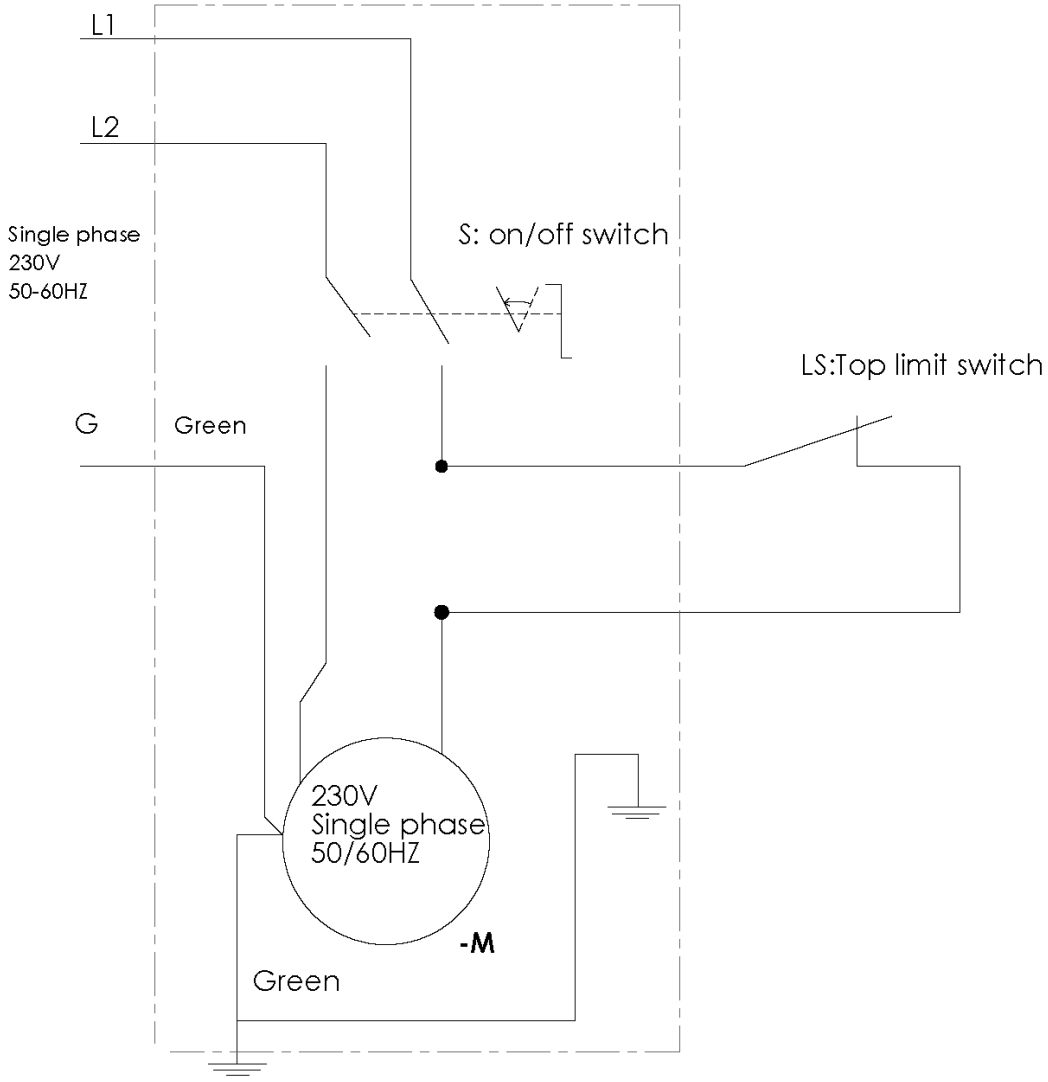

1 All wires are 10AWG

Power Unit 2

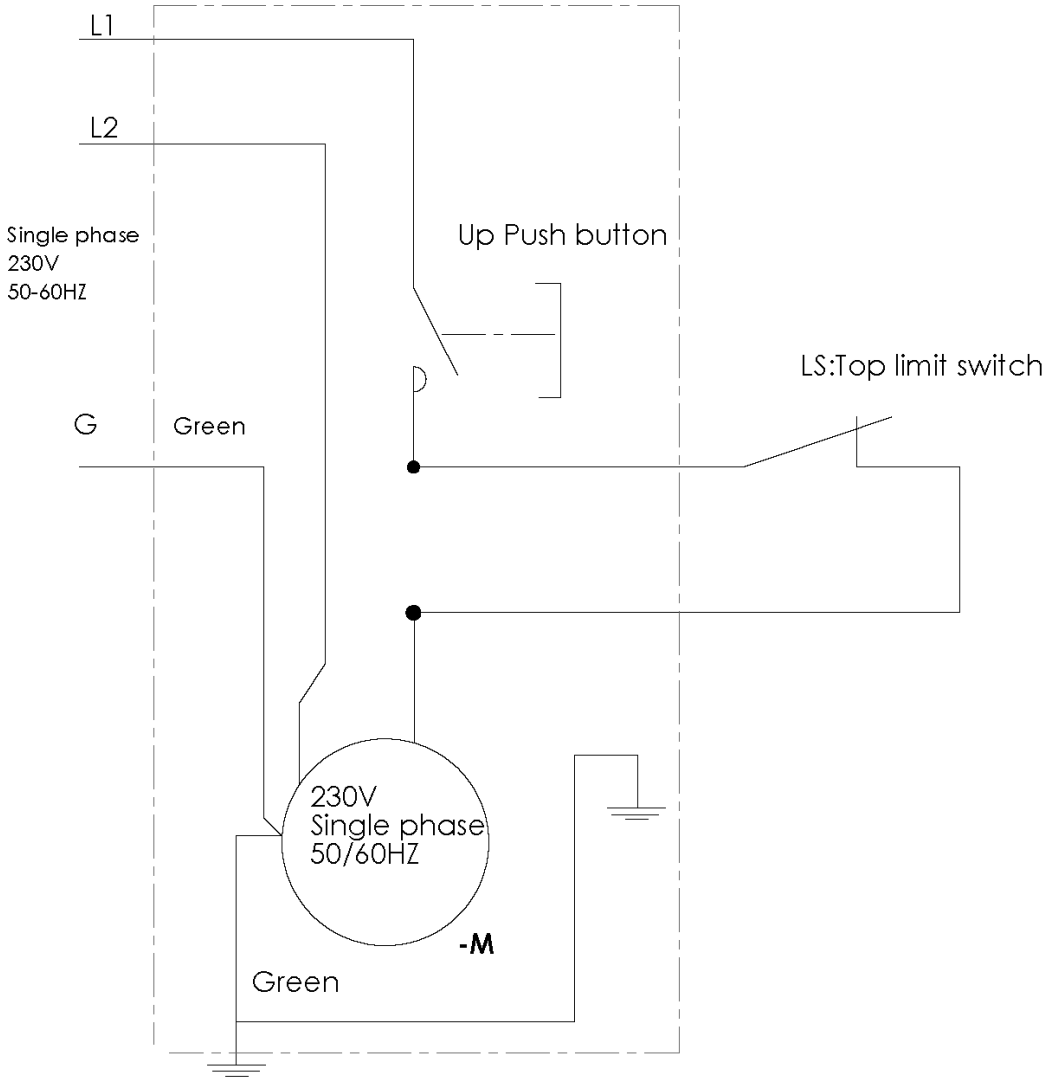

1 All wires are 12AWG

Labels

A

B

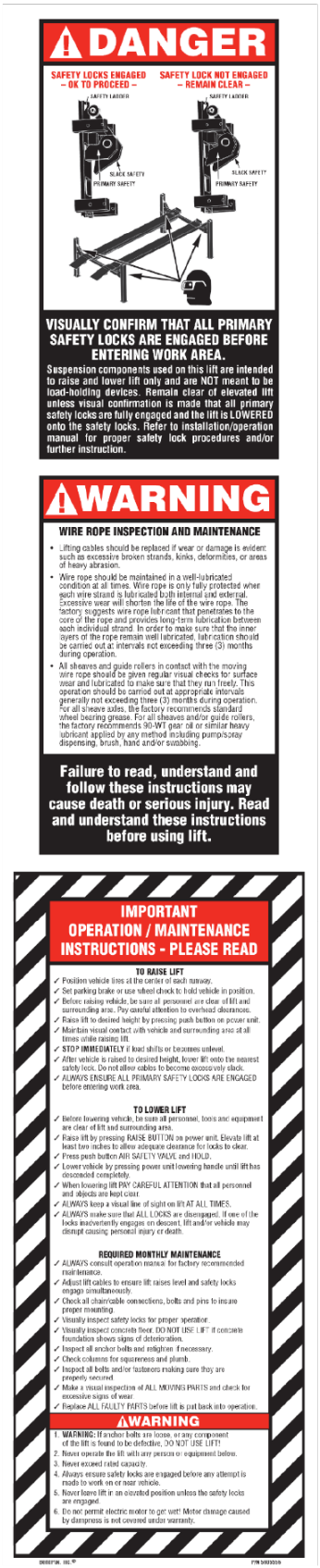

DANGER

SAFETY LOCKS ENGAGED – OK TO PROCEED –

SAFETY LOCK NOT ENGAGED – REMAIN CLEAR –

SAFETY LADDER

SLACK SAFETY PRIMARY SAFETY

VISUALLY CONFIRM THAT ALL PRIMARY SAFETY LOCKS ARE ENGAGED BEFORE ENTERING WORK AREA.

Suspension components used on this lift are intended to raise and lower lift only and are NOT meant to be load-holding devices. Remain clear of elevated lift unless visual confirmation is made that all primary safety locks are fully engaged and the lift is LOWERED onto the safety locks. Refer to installation/operation manual for proper safety lock procedures and/or further instruction.

WARNING

WIRE ROPE INSPECTION AND MAINTENANCE

- Lifting cables should be replaced if wear or damage is evident such as excessive broken strands, kinks, deformities, or areas of heavy abrasion.
- Wire rope should be maintained in a well-lubricated condition at all times. Wire rope is only fully protected when each wire strand is lubricated both internal and external. Excessive wear will shorten the life of the wire rope. The factory suggests wire rope lubricant that penetrates to the core of the rope and provides long-term lubrication between each individual strand. In order to make sure that the inner layers of the rope remain well lubricated, lubrication should be carried out at intervals not exceeding three (3) months during operation.
- All sheaves and guide rollers in contact with the moving wire rope should be given regular visual checks for surface wear and lubricated to make sure that they run freely. This operation should be carried out at appropriate intervals generally not exceeding three (3) months during operation. For all sheave sales, the factory recommends standard wheel bearing grease. For all sheaves and/or guide rollers, the factory recommends 90-WT gear oil or similar heavy lubricant applied by any method including pump/spray dispensing, brush, hand and/or swabbing.

Failure to read, understand and follow these instructions may cause death or serious injury. Read and understand these instructions before using lift.

IMPORTANT OPERATION / MAINTENANCE INSTRUCTIONS - PLEASE READ

TO RAISE LIFT

- ✓ Position vehicle lines at the center of each runway.
- ✓ Set parking brake or use wheel chock to hold vehicle in position.
- ✓ Before raising vehicle, be sure all personnel are clear of lift and surrounding area. Pay careful attention to overhead clearances.
- ✓ Raise lift to desired height by pressing push button on power unit.
- ✓ Maintain visual contact with vehicle and surrounding area at all times while raising lift.
- ✓ STOP IMMEDIATELY if load shifts or becomes unlevel.
- ✓ After vehicle is raised to desired height, lower lift onto the nearest safety lock. Do not allow cables to become excessively slack.
- ✓ ALWAYS ENSURE ALL PRIMARY SAFETY LOCKS ARE ENGAGED before entering work area.

TO LOWER LIFT

- ✓ Before lowering vehicle, be sure all personnel, tools and equipment are clear of lift and surrounding area.
- ✓ Raise lift by pressing RAISE BUTTON on power unit. Elevate lift at least two inches to allow adequate clearance for locks to clear.
- ✓ Press push button AIR SAFETY VALVE and HOLD.
- ✓ Lower vehicle by pressing power unit lowering handle until lift has descended completely.
- ✓ When lowering lift PAY CAREFUL ATTENTION that all personnel and objects are kept clear.
- ✓ ALWAYS keep a visual line of sight on lift AT ALL TIMES.
- ✓ ALWAYS make sure that ALL LOCKS are disengaged. If one of the locks inadvertently engages on descent, lift and/or vehicle may disrupt causing personal injury or death.

REQUIRED MONTHLY MAINTENANCE

- ✓ ALWAYS consult operation manual for factory recommended maintenance.
- ✓ Adjust lift cables to ensure lift raises level and safety locks engage simultaneously.
- ✓ Check all chain/cable connections, bolts and pins to insure proper mounting.
- ✓ Visually inspect safety locks for proper operation.
- ✓ Visually inspect concrete floor. DO NOT USE LIFT if concrete foundation shows signs of deterioration.
- ✓ Inspect all anchor bolts and retighten if necessary.
- ✓ Check columns for squareness and plumb.
- ✓ Inspect all bolts and/or fasteners making sure they are properly secured.
- ✓ Make a visual inspection of ALL MOVING PARTS and check for excessive signs of wear.
- ✓ Replace ALL FAULTY PARTS before lift is put back into operation.

WARNING

1. WARNING: If anchor bolts are loose, or any component of the lift is found to be defective, DO NOT USE LIFT!
2. Never operate the lift with any person or equipment below.
3. Never exceed rated capacity.
4. Always ensure safety locks are engaged before any attempt is made to work on or near vehicle.
5. Never leave lift in an elevated position unless the safety locks are engaged.
6. Do not permit electric motor to get wet! Motor damage caused by dampness is not covered under warranty.

BENDPAK INC.® P/N 5900039

C

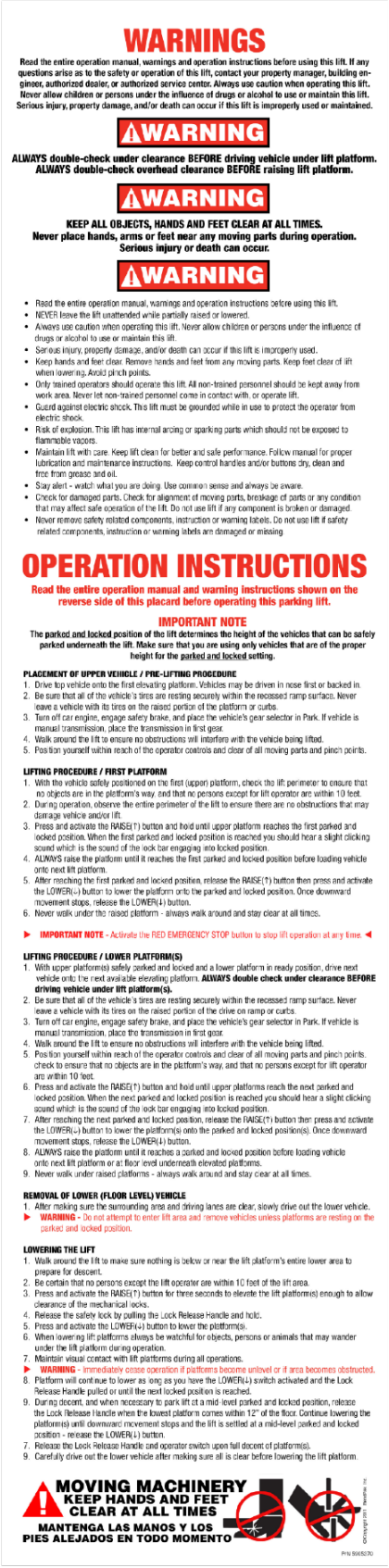

WARNINGS

Read the entire operation manual, warnings and operation instructions before using this lift. If any questions arise as to the safety or operation of this lift, contact your property manager, building engineer, authorized dealer, or authorized service center. Always use caution when operating this lift. Never allow children or persons under the influence of drugs or alcohol to use or maintain this lift. Serious injury, property damage, and/or death can occur if this lift is improperly used or maintained.

WARNING

ALWAYS double-check under clearance BEFORE driving vehicle under lift platform. ALWAYS double-check overhead clearance BEFORE raising lift platform.

WARNING

KEEP ALL OBJECTS, HANDS AND FEET CLEAR AT ALL TIMES. Never place hands, arms or feet near any moving parts during operation. Serious injury or death can occur.

WARNING

- Read the entire operation manual, warnings and operation instructions before using this lift.
- NEVER leave the lift unattended while partially raised or lowered.
- Always use caution when operating this lift. Never allow children or persons under the influence of drugs or alcohol to use or maintain this lift.
- Serious injury, property damage, and/or death can occur if this lift is improperly used.
- Keep hands and feet clear. Remove hands and feet from any moving parts. Keep feet clear of lift when lowering. Avoid pinch points.
- Only trained operators should operate this lift. All non-trained personnel should be kept away from work area. Never let non-trained personnel come in contact with, or operate lift.
- Guard against electric shock. This lift must be grounded while in use to protect the operator from electric shock.
- Risk of explosion. This lift has internal arcing or sparking parts which should not be exposed to flammable vapors.
- Maintain lift with care. Keep lift clean for better and safe performance. Follow manual for proper lubrication and maintenance instructions. Keep control handles and/or buttons dry, clean and free from grease and oil.
- Stay alert - watch what you are doing. Use common sense and always be aware.
- Check for damaged parts. Check for alignment of moving parts, breakage of parts or any condition that may affect safe operation of the lift. Do not use lift if any component is broken or damaged.
- Never remove safety related components, instruction or warning labels. Do not use lift if safety related components, instruction or warning labels are damaged or missing.

OPERATION INSTRUCTIONS

Read the entire operation manual and warning instructions shown on the reverse side of this placard before operating this parking lift.

IMPORTANT NOTE

The parked and locked position of the lift determines the height of the vehicles that can be safely parked underneath the lift. Make sure that you are using only vehicles that are of the proper height for the parked and locked setting.

PLACEMENT OF UPPER VEHICLE / PRE-LIFTING PROCEDURE

1. Drive top vehicle onto the first elevating platform. Vehicles may be driven in nose first or backed in.
2. Be sure that all of the vehicle's tires are resting securely within the recessed ramp surface. Never leave a vehicle with its tires on the raised portion of the platform or curbs.
3. Turn off car engine, engage safety brake, and place the vehicle's gear selector in Park. If vehicle is manual transmission, place the transmission in first gear.
4. Walk around the lift to ensure no obstructions will interfere with the vehicle being lifted.
5. Position yourself within reach of the operator controls and clear of all moving parts and pinch points.

LIFTING PROCEDURE / FIRST PLATFORM

1. With the vehicle safely positioned on the first (upper) platform, check the lift perimeter to ensure that no objects are in the platform's way, and that no persons except for lift operator are within 10 feet.
2. During operation, observe the entire perimeter of the lift to ensure there are no obstructions that may damage vehicle and/or lift.
3. Press and activate the RAISE(↑) button and hold until upper platform reaches the first parked and locked position. When the first parked and locked position is reached you should hear a slight clicking sound which is the sound of the lock bar engaging into locked position.
4. ALWAYS raise the platform until it reaches the first parked and locked position before loading vehicle onto next lift platform.
5. After reaching the first parked and locked position, release the RAISE(↑) button then press and activate the LOWER(↓) button to lower the platform onto the parked and locked position. Once downward movement stops, release the LOWER(↓) button.
6. Never walk under the raised platform - always walk around and stay clear at all times.

► IMPORTANT NOTE - Activate the RED EMERGENCY STOP button to stop lift operation at any time. ◄

LIFTING PROCEDURE / LOWER PLATFORM(S)

1. With upper platform(s) safely parked and locked and a lower platform in ready position, drive next vehicle onto the next available elevating platform. **ALWAYS double check under clearance BEFORE driving vehicle under lift platform(s).**
2. Be sure that all of the vehicle's tires are resting securely within the recessed ramp surface. Never leave a vehicle with its tires on the raised portion of the drive on ramp or curbs.
3. Turn off car engine, engage safety brake, and place the vehicle's gear selector in Park. If vehicle is manual transmission, place the transmission in first gear.
4. Walk around the lift to ensure no obstructions will interfere with the vehicle being lifted.
5. Position yourself within reach of the operator controls and clear of all moving parts and pinch points. check to ensure that no objects are in the platform's way, and that no persons except for lift operator are within 10 feet.
6. Press and activate the RAISE(↑) button and hold until upper platforms reach the next parked and locked position. When the next parked and locked position is reached you should hear a slight clicking sound which is the sound of the lock bar engaging into locked position.
7. After reaching the next parked and locked position, release the RAISE(↑) button then press and activate the LOWER(↓) button to lower the platform(s) onto the parked and locked position(s). Once downward movement stops, release the LOWER(↓) button.
8. ALWAYS raise the platform until it reaches a parked and locked position before loading vehicle onto next lift platform or at floor level underneath elevated platforms.
9. Never walk under raised platforms - always walk around and stay clear at all times.

REMOVAL OF LOWER (FLOOR LEVEL) VEHICLE

1. After making sure the surrounding area and driving lanes are clear, slowly drive out the lower vehicle.

► WARNING - Do not attempt to enter lift area and remove vehicles unless platforms are resting on the parked and locked position.

LOWERING THE LIFT

1. Walk around the lift to make sure nothing is below or near the lift platform's entire lower area to prepare for descent.
2. Be certain that no persons except the lift operator are within 10 feet of the lift area.
3. Press and activate the RAISE(↑) button for three seconds to elevate the lift platform(s) enough to allow clearance of the mechanical locks.
4. Release the safety lock by pulling the Lock Release Handle and hold.
5. Press and activate the LOWER(↓) button to lower the platform(s).
6. When lowering lift platforms always be watchful for objects, persons or animals that may wander under the lift platform during operation.
7. Maintain visual contact with lift platforms during all operations.

► WARNING - Immediately cease operation if platforms become unlevel or if area becomes obstructed.

8. Platform will continue to lower as long as you have the LOWER(↓) switch activated and the Lock Release Handle pulled or until the next locked position is reached.
9. During decent, and when necessary to park lift at a mid-level parked and locked position, release the Lock Release Handle when the lowest platform comes within 12" of the floor. Continue lowering the platform(s) until downward movement stops and the lift is settled at a mid-level parked and locked position - release the LOWER(↓) button.
7. Release the Lock Release Handle and operator switch upon full decent of platform(s).
9. Carefully drive out the lower vehicle after making sure all is clear before lowering the lift platform.

MOVING MACHINERY KEEP HANDS AND FEET CLEAR AT ALL TIMES

MANTENGA LAS MANOS Y LOS PIES ALEJADOS EN TODO MOMENTO

Copyright 2015 BendPak, Inc.

P/N 5005270

D


DANGER-PELIGRO
MOVING MACHINERY
KEEP HANDS AND FEET
CLEAR AT ALL TIMES
MANTENGA LAS MANOS Y LOS
PIES CLARO EN TODO MOMENTO
DANGER-PELIGRO
Remain clear of lift at all times
when raising or lowering vehicles.
>NO RIDERS ON PLATFORMS<
Trained operators only
are to use lift.
WARNING
PARKING LIFT WIRE ROPE INSPECTION
AND MAINTENANCE
• Lifting cables should be replaced every (5) five years or when visible signs of damage are apparent. DO NOT USE LIFT WITH DEFECTIVE OR WORN CABLES.
• Wire rope should be maintained in a well-lubricated condition at all times. Wire rope is only fully protected when each wire strand is lubricated both internal and external. Excessive wear will shorten the life of the wire rope. The factory suggests wire rope lubricant that penetrates to the core of the rope and provides long-term lubrication between each individual strand. In order to make sure that the inner layers of the rope remain well lubricated, lubrication should be carried out at intervals not exceeding three (3) months during operation.
• All sheaves and guide rollers in contact with the moving wire rope should be given regular visual checks for surface wear and lubricated to make sure that they run freely. This operation should be carried out at appropriate intervals generally not exceeding three (3) months during operation. The factory recommends applying wheel bearing grease or similar heavy lubricant, through the use of a grease gun, to the zerk fittings of the sheave axles and sheaves.
Failure to read, understand and
follow these instructions may
cause death or serious injury. Read
and understand these instructions
before using lift.

E

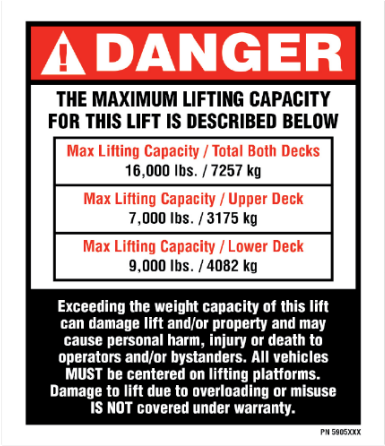
DANGER
THE MAXIMUM LIFTING CAPACITY
FOR THIS LIFT IS DESCRIBED BELOW
Max Lifting Capacity / Total Both Decks
16,000 lbs. / 7257 kg
Max Lifting Capacity / Upper Deck
7,000 lbs. / 3175 kg
Max Lifting Capacity / Lower Deck
9,000 lbs. / 4082 kg
Exceeding the weight capacity of this lift
can damage lift and/or property and may
cause personal harm, injury or death to
operators and/or bystanders. All vehicles
MUST be centered on lifting platforms.
Damage to lift due to overloading or misuse
IS NOT covered under warranty.
P/N 5905XXX

F


ATTENTION
TOP PLATFORM
MAXIMUM LIFTING CAPACITY
7000 Lbs.
3175 Kg.
BOTTOM PLATFORM
MAXIMUM LIFTING CAPACITY
9000 Lbs.
4082 Kg.

G

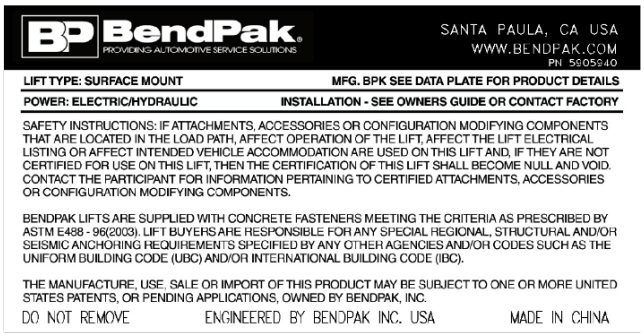
BendPak
PROVIDING AUTOMOTIVE SERVICE SOLUTIONS
SANTA PAULA, CA USA
WWW.BENDPAK.COM
PN 5905940
LIFT TYPE: SURFACE MOUNT
MFG. BPK SEE DATA PLATE FOR PRODUCT DETAILS
POWER: ELECTRIC/HYDRAULIC
INSTALLATION - SEE OWNERS GUIDE OR CONTACT FACTORY
SAFETY INSTRUCTIONS: IF ATTACHMENTS, ACCESSORIES OR CONFIGURATION MODIFYING COMPONENTS THAT ARE LOCATED IN THE LOAD PATH, AFFECT OPERATION OF THE LIFT, AFFECT THE LIFT ELECTRICAL LISTING OR AFFECT INTENDED VEHICLE ACCOMMODATION ARE USED ON THIS LIFT AND, IF THEY ARE NOT CERTIFIED FOR USE ON THIS LIFT, THEN THE CERTIFICATION OF THIS LIFT SHALL BECOME NULL AND VOID. CONTACT THE PARTICIPANT FOR INFORMATION PERTAINING TO CERTIFIED ATTACHMENTS, ACCESSORIES OR CONFIGURATION MODIFYING COMPONENTS.
BENDPAK LIFTS ARE SUPPLIED WITH CONCRETE FASTENERS MEETING THE CRITERIA AS PRESCRIBED BY ASTM E488 - 96(2003). LIFT BUYERS ARE RESPONSIBLE FOR ANY SPECIAL REGIONAL, STRUCTURAL AND/OR SEISMIC ANCHORING REQUIREMENTS SPECIFIED BY ANY OTHER AGENCIES AND/OR CODES SUCH AS THE UNIFORM BUILDING CODE (UBC) AND/OR INTERNATIONAL BUILDING CODE (IBC).
THE MANUFACTURE, USE, SALE OR IMPORT OF THIS PRODUCT MAY BE SUBJECT TO ONE OR MORE UNITED STATES PATENTS, OR PENDING APPLICATIONS, OWNED BY BENDPAK, INC.
DO NOT REMOVE
ENGINEERED BY BENDPAK INC. USA
MADE IN CHINA

H

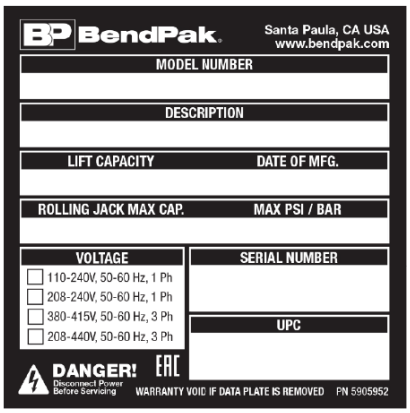
BendPak
Santa Paula, CA USA
www.bendpak.com
MODEL NUMBER
DESCRIPTION
LIFT CAPACITY
DATE OF MFG.
ROLLING JACK MAX CAP.
MAX PSI / BAR
VOLTAGE
110-240V, 50-60 Hz, 1 Ph
208-240V, 50-60 Hz, 1 Ph
380-415V, 50-60 Hz, 3 Ph
208-440V, 50-60 Hz, 3 Ph
SERIAL NUMBER
UPC
DANGER!
Disconnect Power
Before Servicing
WARRANTY VOID IF DATA PLATE IS REMOVED
PN 5905952


POWERSIDE POST
A
PLACE ON BOTH SIDES
OF POSTS (8 TOTAL)
84"
84" FROM BOTTOM OF POST
TO BOTTOM OF LABEL

Views of Powerside Post

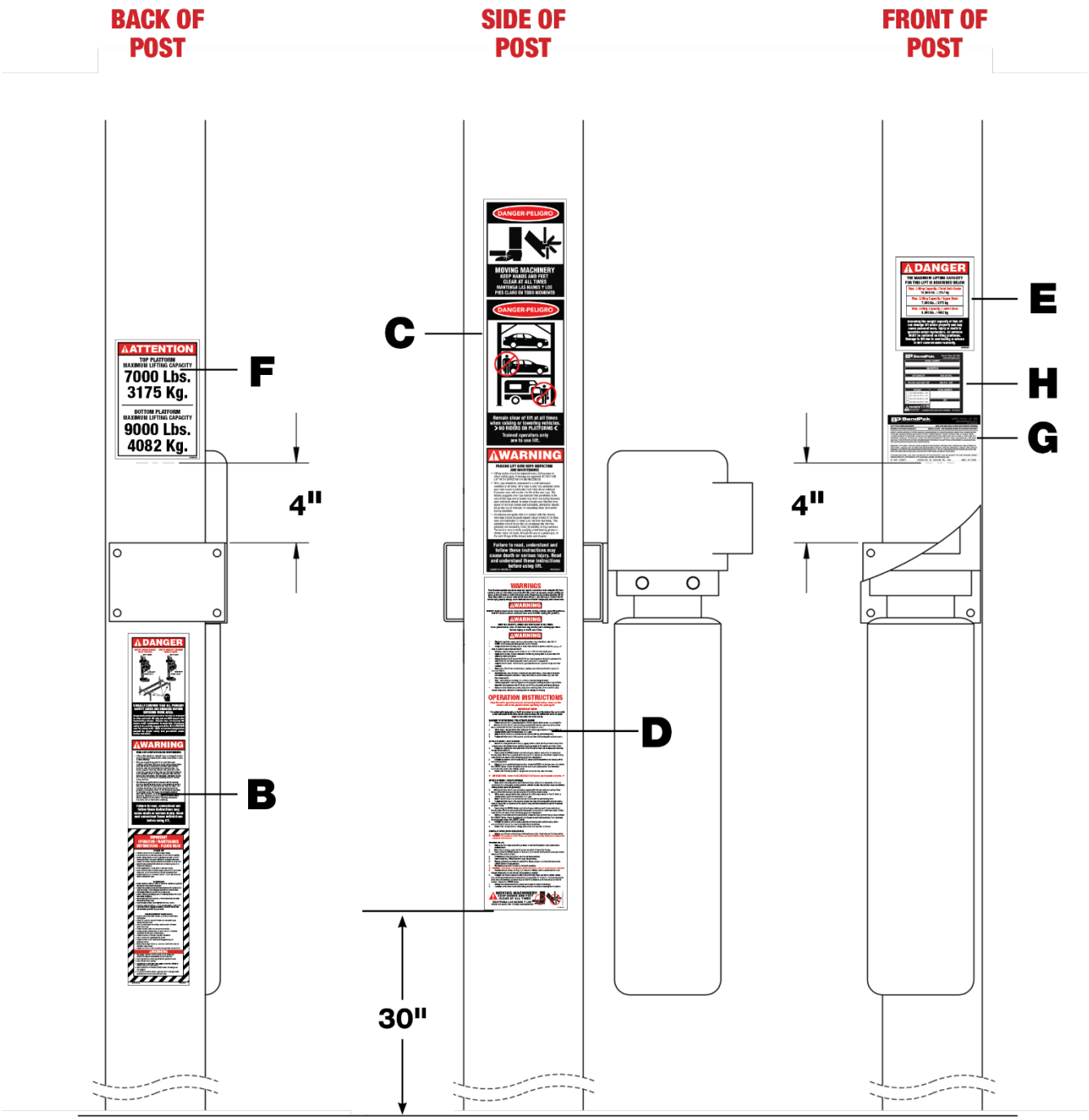

Parts Drawings

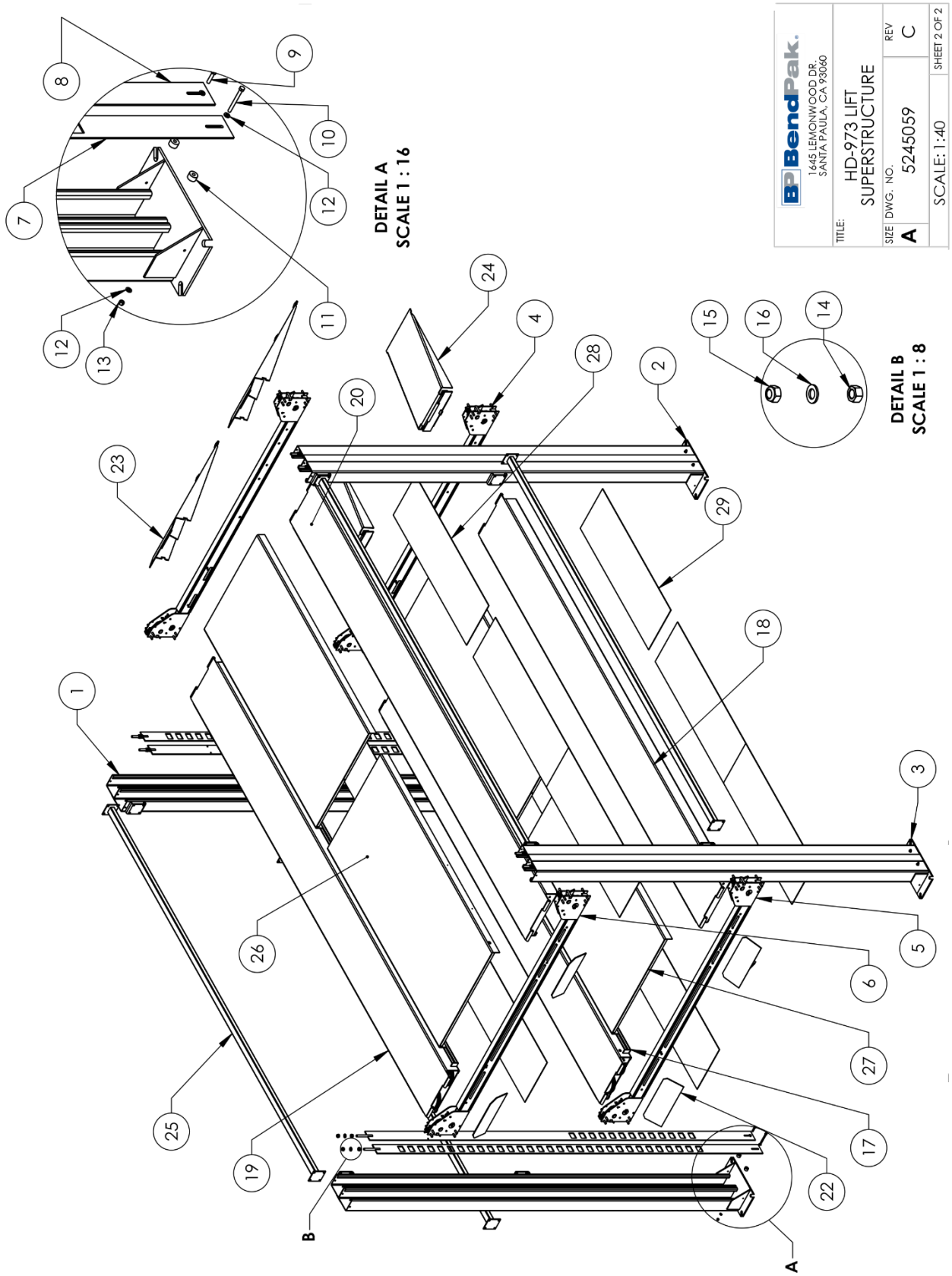

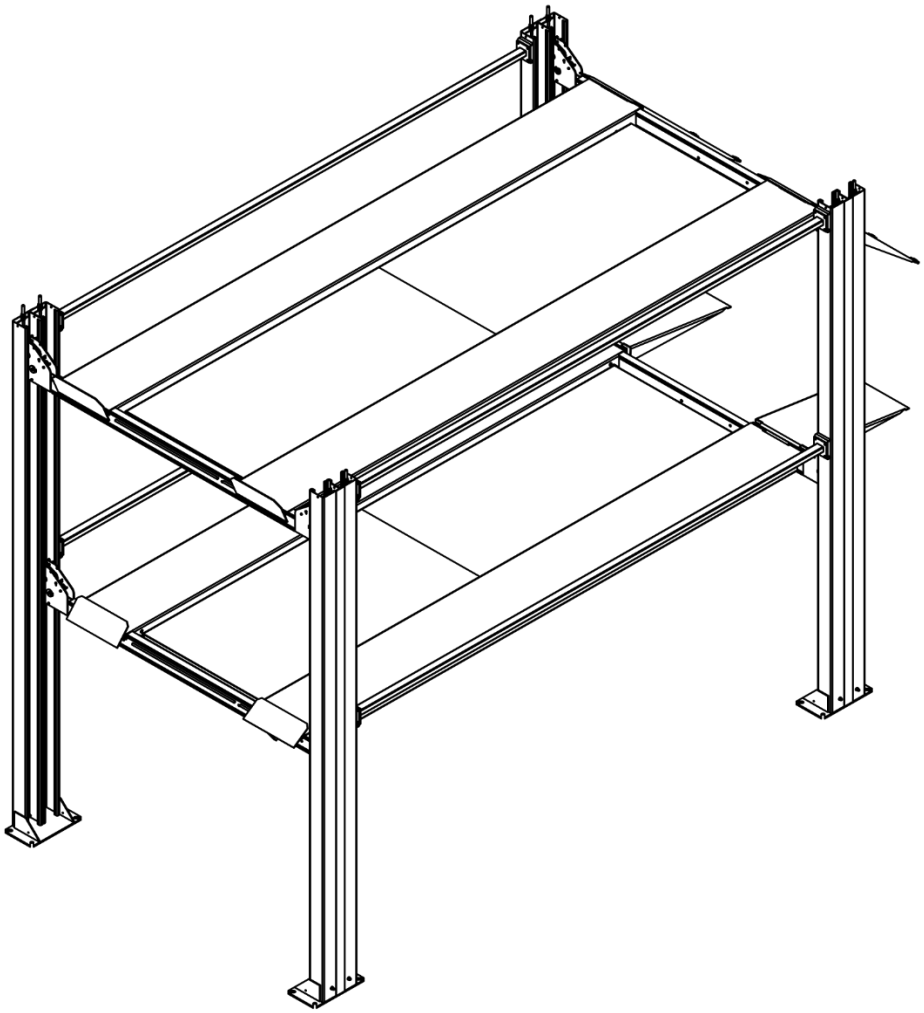

ITEM NO	PART NUMBER	DESCRIPTION	QTY	REV
1	5601274	HD-973 POWER SIDE POST WELDMENT	1	B
2	5601275	HD-973 OFF SIDE POST WELDMENT	2	B
3	5601299	HD-973 OFF SIDE POST WELDMENT, L.H.	1	A
4	5215621	HD-7W/9/9XL/XW CROSSTUBE ASSEMBLY, SMALL WINDOW	2	Q
5	5215622	HD-9/9XL/XW CROSSTUBE ASSEMBLY, LARGE WINDOW	1	P
6	5215624	HD-7W SERIES CROSSTUBE ASSEMBLY, LARGE WINDOW	1	P
7	5600921	HD-7PX SERIES SAFETY LADDER WELDMENT	4	B
8	5601281	HD-973 LOWER RAMP SAFETY LADDER WELDMENT	4	B
9	5530167	HHB M10 x 1.5 x 45mm	4	--
10	5530748	HHB M10 x 1.5 x 100mmL	4	--
11	5746381	HD-7/7500/ 9 SPACER, SAFETY LADDER, 17.5mm LG	8	B
12	5545341	WASHER M10 x Ø20 FLAT	16	--
13	5535013	NUT M10 x 1.5 NL	8	--
14	5535021	NUT M16 x 2.0	8	--
15	5535008	NUT M16 x 2 NL	8	--
16	5545025	WASHER M16 x 30mm FLAT	8	--
17	5215787	HD-973 LOWER POWER SIDE RAMP ASSEMBLY	1	B
18	5601271	HD-973 LOWER OFF SIDE RAMP WELDMENT	1	B
19	5215817	HD-973 UPPER POWER SIDE RAMP ASSEMBLY	1	A
20	5601295	HD-973 UPPER OFF SIDE RAMP WELDMENT	1	A
21	5600890	HD-7/7500/9 SERIES TIRE STOP PLATE WELDMENT	2	F
22	5601356	HD-973 TIRE STOP WELDMENT	2	A
23	5215131	HD-9/ST/STX/XL/XW EXTENDED DRIVE UP RAMP ASSEMBLY	2	F
24	5174220	HD-9 ALUMINUM APPROACH RAMP ASSEMBLY	2	F
25	5601296	HD-973 STIFFENER TUBE WELDMENT	4	A
26	5601293	HD-973 ALUMINUM LONG SOLID DECK WELDMENT	3	A
27	5601273	HD-973 ALUMINUM SHORT SOLID DECK WELDMENT	1	B
28	5701560	HD-973 UPPER RAMP PLASTIC COVER	6	A
29	5701558	HD-973 LOWER RAMP PLASTIC COVER	6	A

DO NOT SCALE DRAWING

	NAME	DATE
DRAWN	TM	06/28/2018
CHECKED	CA	02/05/2019

BendPak.
1645 LEMONWOOD DR.
SANTA PAULA, CA 93060

DIMENSIONS ARE IN MM

THIRD ANGLE PROJECTION

TITLE: HD-973 LIFT SUPERSTRUCTURE

SIZE A | DWG. NO. 5245059 | REV C

SCALE: 1:45 | SHEET 1 OF 2

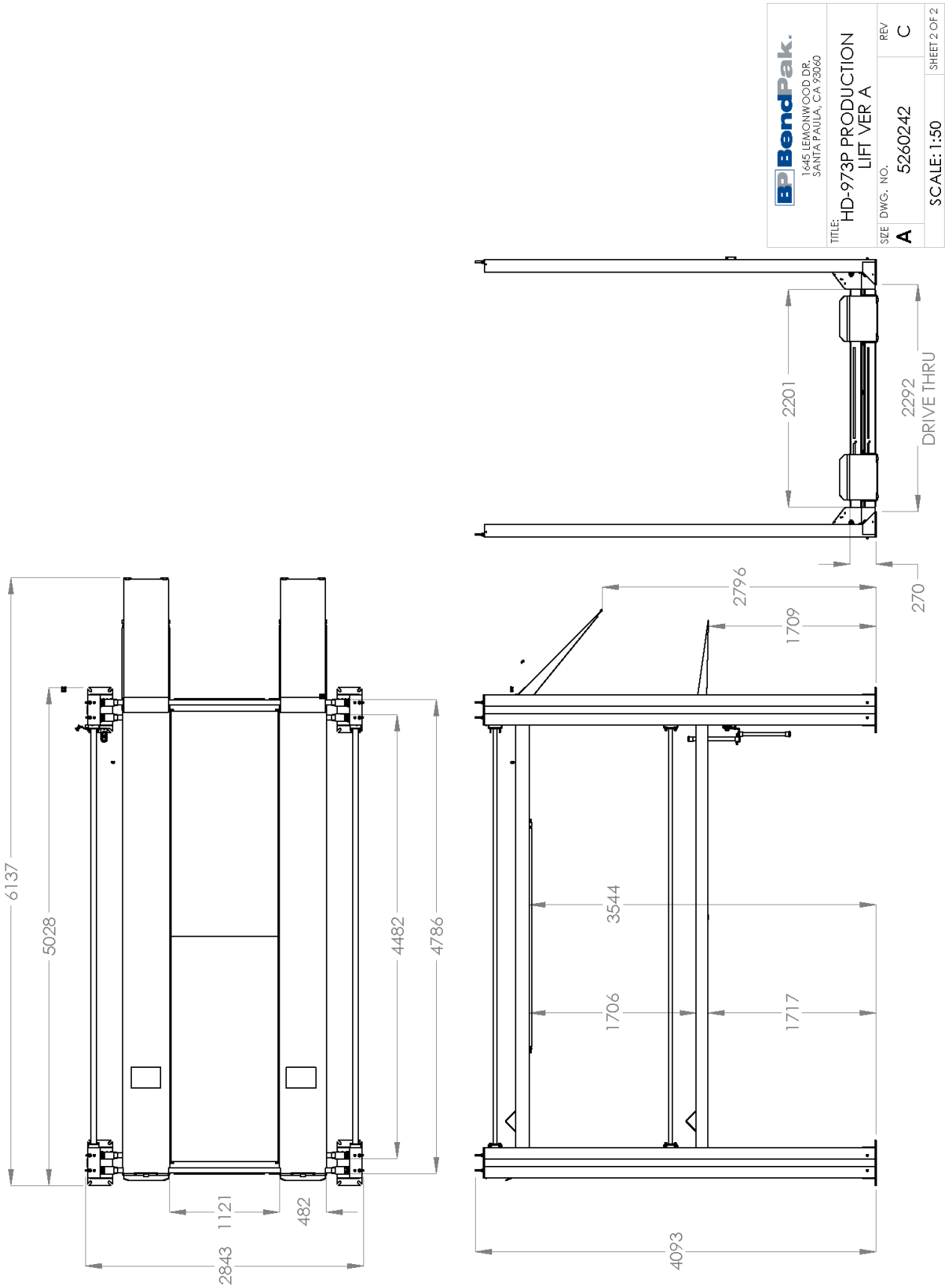
BendPak
1645 LEMONWOOD DR.
SANTA PAULA, CA 93060
TITLE:
HD-973P PRODUCTION
LIFT VER A
SIZE
A
DWG. NO.
5260242
REV
C
SCALE: 1:50
SHEET 2 OF 2
6137
5028
4482
4786
1121
482
2843
2201
2292
DRIVE THRU
270
2796
1709
3544
1706
1717
4093

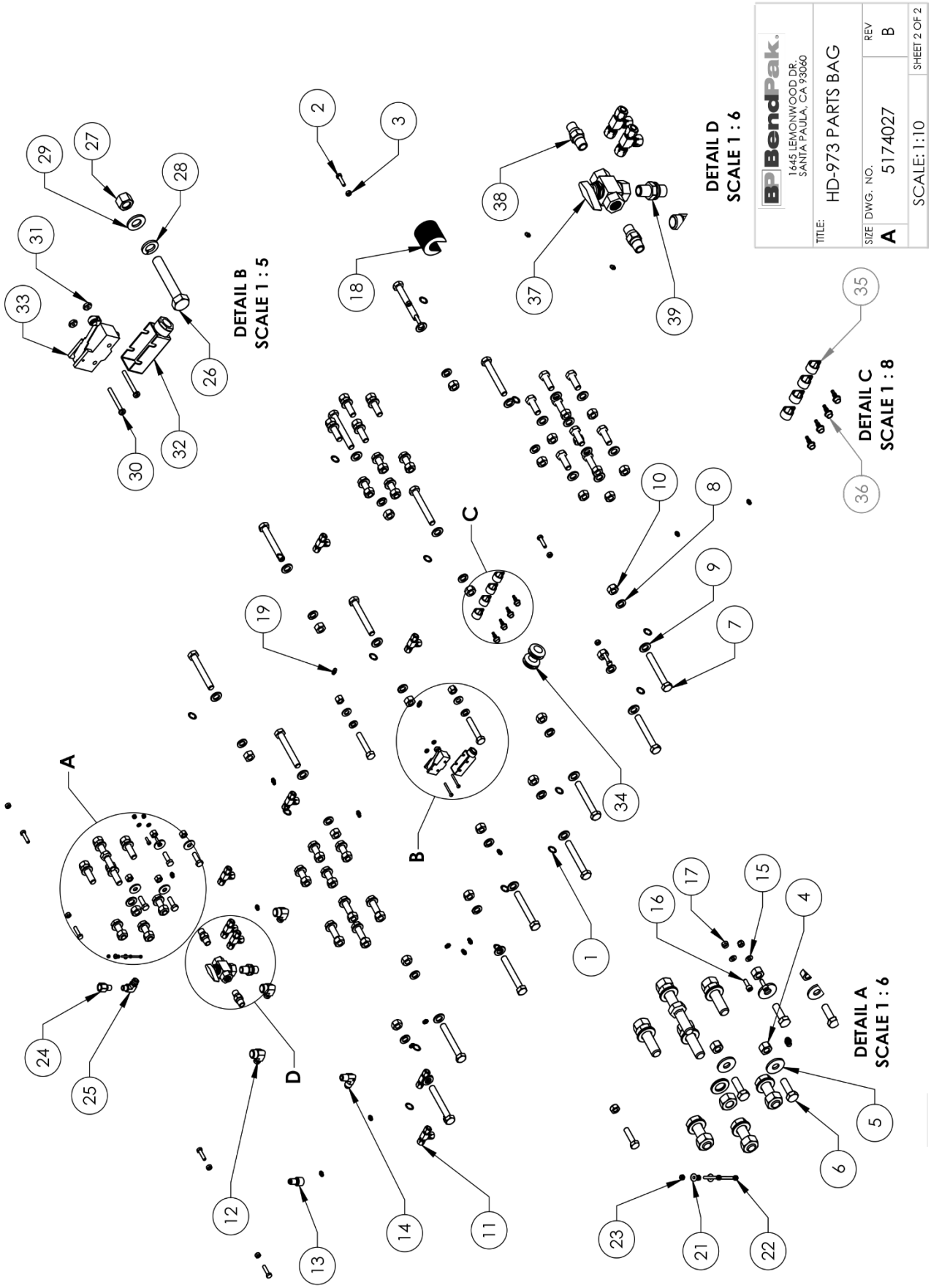
BendPak
1645 LEMONWOOD DR.
SANTA PAULA, CA 93060
TITLE:
HD-973 PARTS BAG
SIZE
A
DWG. NO.
5174027
REV
B
SCALE: 1:10
SHEET 2 OF 2
DETAIL A
SCALE 1 : 6
DETAIL B
SCALE 1 : 5
DETAIL C
SCALE 1 : 8
DETAIL D
SCALE 1 : 6
A
B
C
D
1
2
3
4
5
6
7
8
9
10
11
12
13
14
15
16
17
18
19
21
22
23
24
25
26
27
28
29
30
31
32
33
34
35
36
37
38
39

ITEM NO	PART NUMBER	DESCRIPTION	QTY	REV
1	5505031	ROTOR CLIP 12mm SS	16	--
2	5530756	HHB M6 x 1 x 25	8	--
3	5535357	NUT M6 x 1.0 NL	8	--
4	5535001	NUT M8 x 1.25 NL	4	--
5	5545340	WASHER M8 x24 FLAT	4	--
6	5530010	HHB M8 x 1.25 x 25	4	--
7	5530009	HHB M12 x 1.75 x 90 CL8.8	16	--
8	5545201	WASHER, M12 SPRING LOCK	16	--
9	5545347	WASHER, M12 FLAT WASHER	48	--
10	5535354	NUT M12 x1.75	48	--
11	5550395	FTG TEE -04 COMP x -04 COMP x -04 COMP	8	--
12	5550089	FTG ELB -04 COMP x -06 NPT	3	--
13	5550493	FTG RST -04 JIC x -06 NPT x .062 ID	1	--
14	5550106	FTG ELB -04 JIC 06-NPT	1	--
15	5545009	WASHER, Ø4.3 x Ø9mm x 0.8mm	2	--
16	5530008	SHCS M4 x 0.7 x 12 BOC	2	--
17	5535010	NUT M4 X 0.7 NL	2	--
18	5545535	C WASHER SHIM FOR LIFTS	19	--
19	5550025	FTG GRS M6 x 1.0	20	--
20	5530076	HHB M12 x 1.75 x 35mm	32	--
21	5545024	WASHER M3 x 9mm	2	--
22	5530043	SHCS M3 x 0.5 x 30	2	--
23	5535020	NUT M3 x 0.5 NL	2	--
24	5550486	FTG NPL -02 NPT x -04 F NPT	1	--
25	5550087	FTG ELB -04 COMP x -02 NPT	1	--
26	5530217	HHB M10 x 1.5 x 58	2	--
27	5535013	NUT M10 x 1.5 NL	2	--
28	5545200	WASHER M10 x Ø18 SL	2	--
29	5545341	WASHER M10 x Ø20 FLAT	2	--
30	5530115	BHS 6-32 x 1.25	2	--
31	5535190	HN 6-32	2	--
32	5525112	MICRO SWITCH COVER-5PA2	1	--
33	5525093	SPDT MICRO SWITCH w ROLLER;25A@125VAC	1	--
34	5520001	RUBBER GROMMET, 3/4 I.D.	2	--
35	5550064	16mm CUISHIONED LOOP STRAP	4	--
36	5530749	STS M6 x 1.0 x 10	4	--
37	5550068	FTG -04 NPT x -04 NPT x -04 NPT DIR VLV	1	--
38	5550147	FTG NPL -04 JIC x -04 NPT	2	--
39	5550093	FTG NPL -06 ORB x -04 NPT	1	--

DO NOT SCALE DRAWING

	NAME	DATE
DRAWN	TM	07/11/2018
CHECKED	CA	02/05/2019

BendPak.
1645 LEMONWOOD DR.
SANTA PAULA, CA 93060

DIMENSIONS ARE IN MM

THIRD ANGLE PROJECTION

TITLE: HD-973 PARTS BAG

SIZE A | DWG. NO. 5174027 | REV B

SCALE: 1:15 | SHEET 1 OF 2

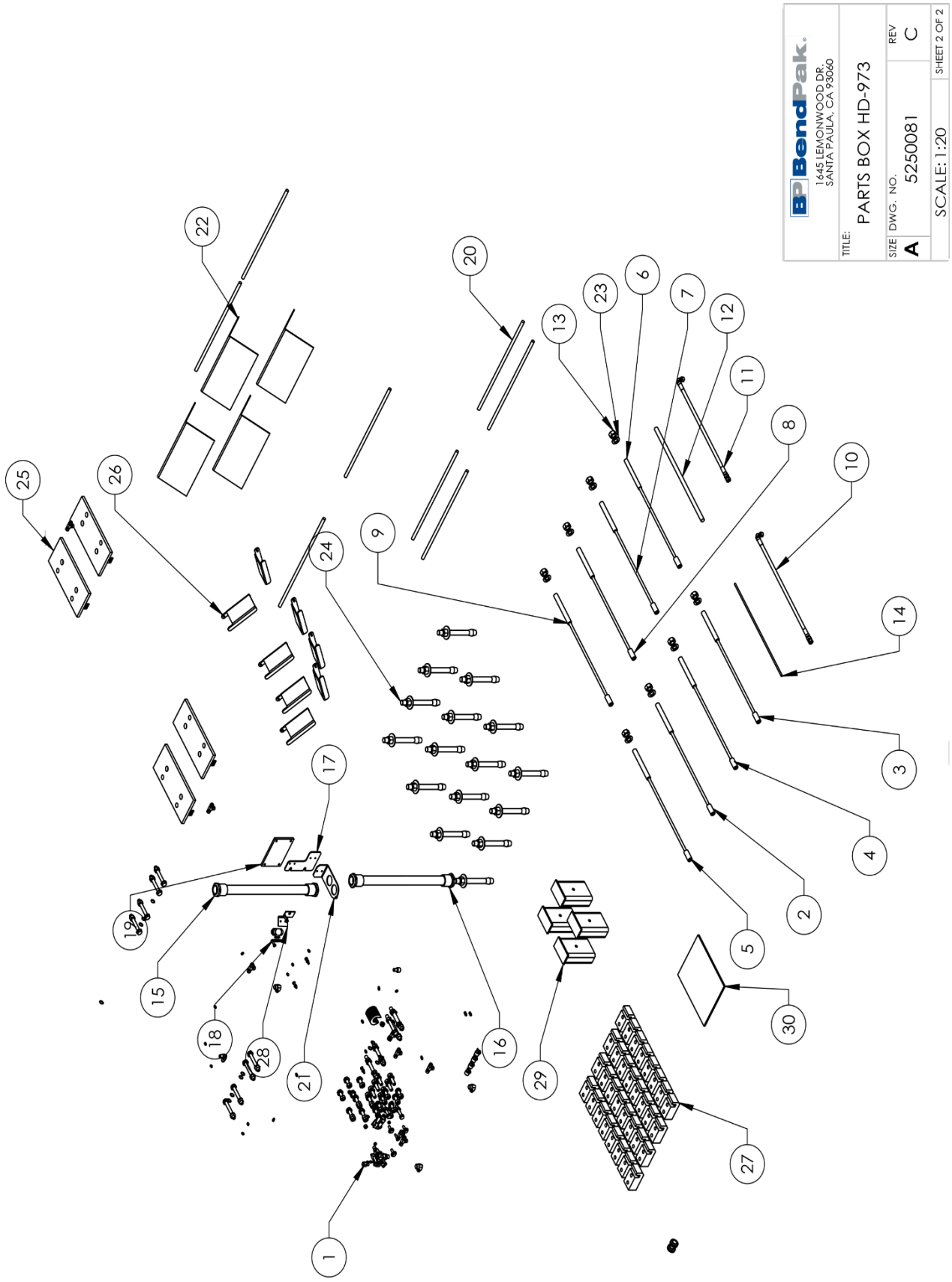
BP BendPak.
1645 LEMONWOOD DR.
SANTA PAULA, CA 93060
TITLE:
PARTS BOX HD-973
SIZE
A
DWG. NO.
5250081
REV
C
SCALE: 1:20
SHEET 2 OF 2
1
2
3
4
5
6
7
8
9
10
11
12
13
14
15
16
17
18
19
20
21
22
23
24
25
26
27
28
29
30

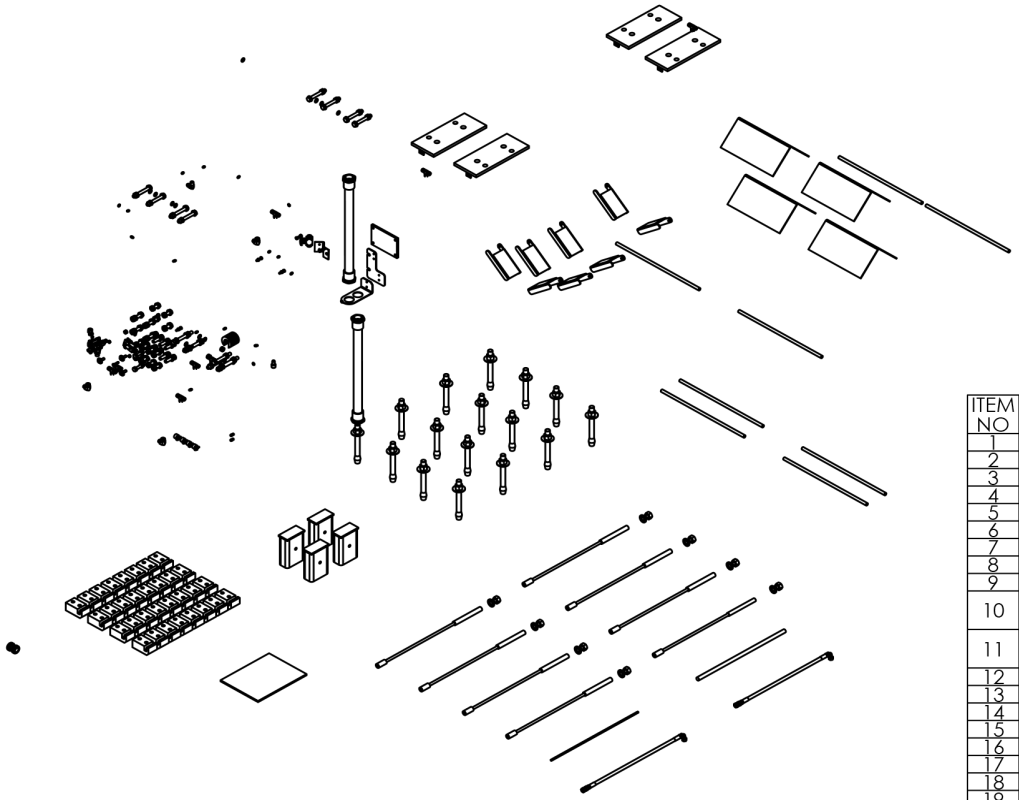

ITEM NO	PART NUMBER	DESCRIPTION	QTY.	REV
1	5174027	HD-973 PARTS BAG	1	B
2	5595467	HD-7PXW CABLE ASSEMBLY Ø10 x 5704mm ST	1	B
3	5595053	HD-7PXW CABLE ASSEMBLY Ø10 x 7301mm ST	1	E
4	5595469	HD-7PXW CABLE ASSEMBLY Ø10 x 10484mm ST	1	B
5	5595055	HD-7PXW CABLE ASSEMBLY Ø10 x 12072mm ST	1	E
6	5595567	CABLE ASSEMBLY Ø10 x 5050mm ST	1	A
7	5595568	CABLE ASSEMBLY Ø10 x 6670mm ST	1	A
8	5595561	CABLE ASSEMBLY Ø10 x 9492mm ST	1	B
9	5595569	CABLE ASSEMBLY Ø10 x 11104mm ST	1	A
10	5570876	HD-7PX SERIES HYDRAULIC HOSE ASSEMBLY Ø6.4 x 4090mm	1	F
11	5570022	HD-14/14SS/14X HD-9/9A/9N/9/PL/9ST/9AE HYDRAULIC HOSE ASSEMBLY Ø6.4 x 3380mm	1	G
12	5520042	10/2 SOOW CSA-UL CORD	1	-
13	5535358	NUT M18 x 2.5 NL	8	-
14	5570795	1/4" POLY-FLO TUBING	40000*mm	-
15	5570050	FLEX TUBE ASSEMBLY 1320mm	1	B
16	5570055	HD-7PXW SERIES FLEX TUBE ASSEMBLY 2440mm	1	D
17	5731004	HD/HDS-PX SERIES FLEX TUBE BRACKET	1	B
18	5590175	PUSH BUTTON AIR VALVE	1	B
19	5715003	POWER UNIT VIBRATION DAMPENER	1	B
20	5745014	HD-7/7500/9 SERIES DRIVE UP RAMP PIN	8	B
21	5700365	DOUBLE FLEX TUBE ANGLE	1	A
22	5700072	WHEEL CHOCK	4	B
23	5545342	WASHER M18 FLAT	8	-
24	5530337	AB 3/4" x 6.3"	16	-
25	5601272	HD-973 POST TOP PLATE WELDMENT	4	B
26	5716630	HD-9 SERIES CROSSTUBE COVER, PLASTIC	8	A
27	5716005	HD-7/7500/9/14/HDSO-14 POLYETHYLENE SLIDE BLOCK	32	L
28	5700031	ZERO ANGLE MTG BRACKET	1	C
29	5601305	HD-973 POST BASE PLATE TOP CROSSTUBE LANDING PAD WELDMENT	4	A
30	5900076	HD-973 INSTALLATION AND OPERATION MANUAL	1	-

DO NOT SCALE DRAWING

DIMENSIONS ARE IN MM

	NAME	DATE
DRAWN	TM	07/10/2018
CHECKED	CA	02/05/2019

THIRD ANGLE PROJECTION

BendPak.
1645 LEMONWOOD DR.
SANTA PAULA, CA 93060

TITLE: PARTS BOX HD-973

SIZE	DWG. NO.	REV
A	5250081	C

SCALE: 1:30 SHEET 1 OF 2

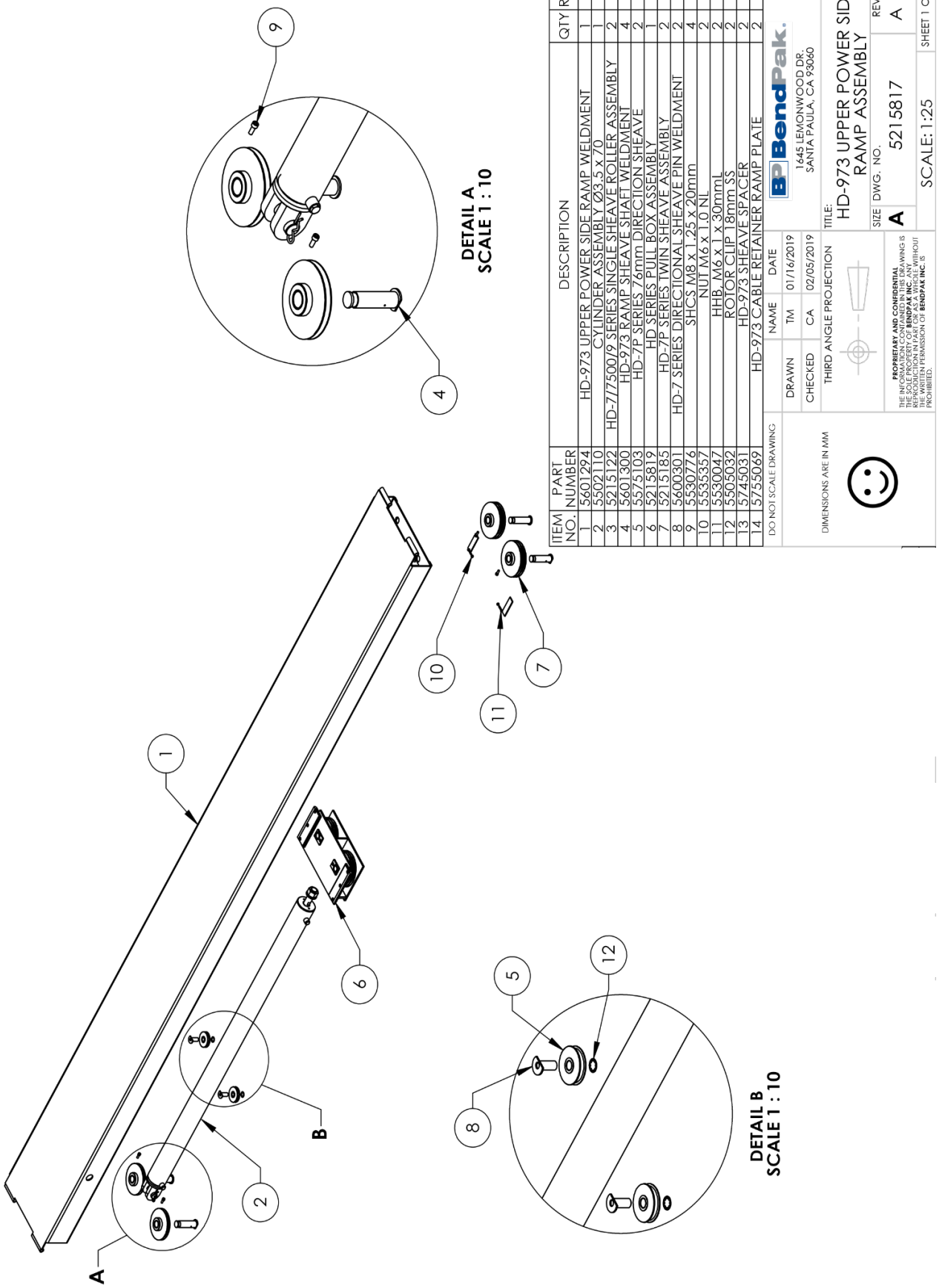

ITEM NO.	PART NUMBER	DESCRIPTION	QTY	REV
1	5601294	HD-973 UPPER POWER SIDE RAMP WELDMENT	1	A
2	5502110	CYLINDER ASSEMBLY Ø3.5 x 70	1	H
3	5215122	HD-7/7500/9 SERIES SINGLE SHEAVE ROLLER ASSEMBLY	2	E
4	5601300	HD-973 RAMP SHEAVE SHAFT WELDMENT	4	A
5	5575103	HD-7P SERIES 76mm DIRECTION SHEAVE	2	D
6	5215819	HD SERIES PULL BOX ASSEMBLY	1	A
7	5215185	HD-7P SERIES TWIN SHEAVE ASSEMBLY	2	C
8	5600301	HD-7 SERIES DIRECTIONAL SHEAVE PIN WELDMENT	2	B
9	5530776	SHCS M8 x 1.25 x 20mm	4	-
10	5533557	NUT M6 x 1.0 NL	2	-
11	5530047	HHB, M6 x 1 x 30mmL	2	-
12	5505032	ROTOR CLIP 18mm SS	2	-
13	5745031	HD-973 SHEAVE SPACER	2	A
14	5755069	HD-973 CABLE RETAINER RAMP PLATE	2	A

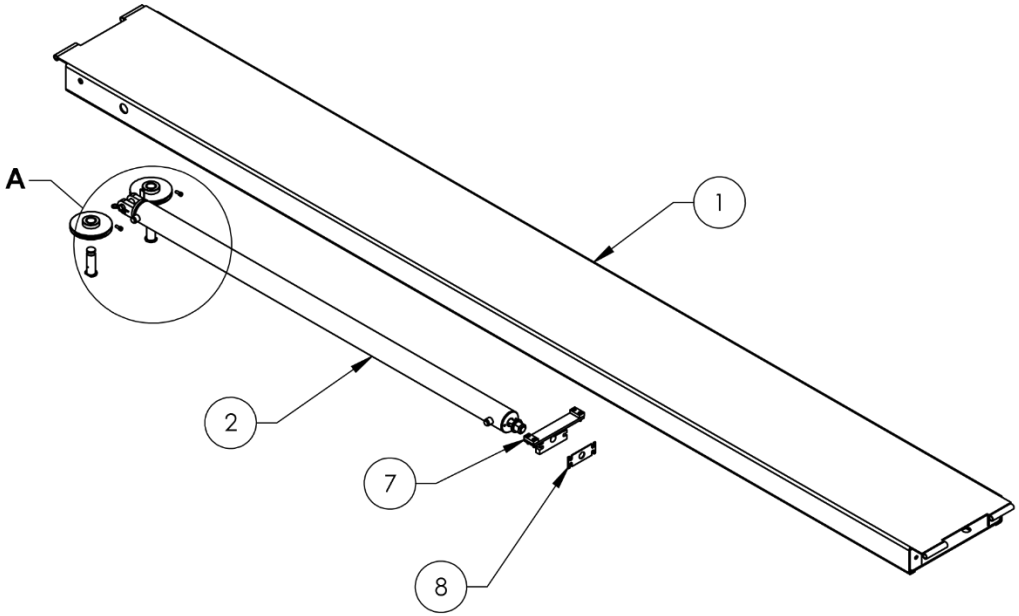

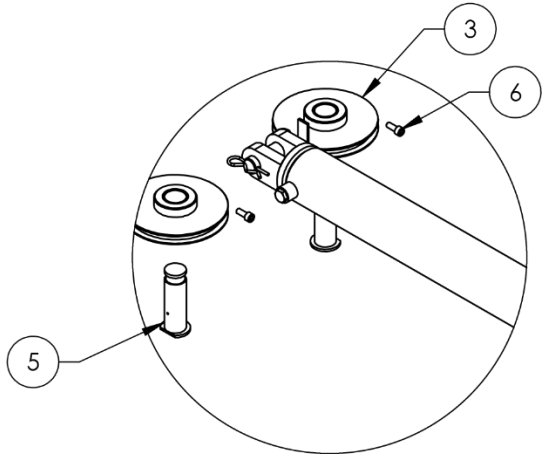

DETAIL A
SCALE 1 : 10

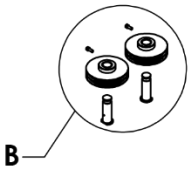

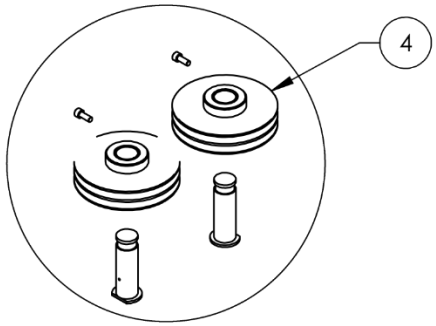

DETAIL B
SCALE 1 : 10

ITEM NO	PART NUMBER	DESCRIPTION	QTY	REV
1	5601270	HD-973 LOWER POWER SIDE RAMP WELDMENT	1	B
2	5502165	CYLINDER ASSEMBLY Ø3.0 x 70	1	K
3	5215122	HD-7/7500/9 SERIES SINGLE SHEAVE ROLLER ASSEMBLY	2	E
4	5215123	HD-7/7500/9 SERIES TWIN SHEAVE ASSEMBLY	2	E
5	5600900	HD-7/7500/9 SERIES RAMP SHEAVE SHAFT WELDMENT	4	D
6	5530776	SHCS M8 x 1.25 x 20mm	4	-
7	5215820	HD-973 CYLINDER FLANGE ARM ASSEMBLY	1	A
8	5731309	CABLE RETAINER PLATE	1	A

DO NOT SCALE DRAWING

	NAME	DATE
DRAWN	TM	06/28/2018
CHECKED	CA	02/05/2019

DIMENSIONS ARE IN MM
TOLERANCES: MACHINE TO
0 = ±1.5
0.0 = ±0.5
0.00 = ±0.13
ANGULAR: MACHINE TO
0. = ±½°
SURFACE FINISH 1.6 Ra µm
FOR MACHINED SURFACES
UNLESS OTHERWISE SPECIFIED

THIRD ANGLE PROJECTION

BP BendPak.
1645 LEMONWOOD DR.
SANTA PAULA, CA 93060

TITLE:
HD-973 LOWER POWER SIDE RAMP ASSEMBLY

SIZE	DWG. NO.	REV
A	5215787	B

SCALE: 1:25 | SHEET 1 OF 2

1645 Lemonwood Drive
Santa Paula, CA, 93060 USA