INSTALLATION & OPERATION MANUAL

Atlas 414

14,000 lb. Capacity Commercial Grade 4 Post Lift

Atlas Automotive Equipment
www.atlasautoequipment.com
(866) 898-2604

Read this entire manual before operation begins.

Record below the following information which is located on the serial number data plate.

Serial No. _____
Model No. _____
Date of Installation _____

Contents

Specifications 4

Installation Requirement 5

Steps Of Installation 7

Exploded View 30

Test Run 33

Cylinder Bleeding Procedure 34

Operation Instructions. 36

Maintenance Schedule. 37

Trouble Shooting 38

Parts List 39

Warranty 44

Specifications

414 Features

- Manual control air-operated system.
- Mechanical self-lock and air-driven safety release.
- Manual hydraulic power system, cable-driven.
- Sand finish platform
- Adjustable platform and adjustable safety lock ladders.
- Optional Jack**:** With hand pump/Air-operated hydraulic pump/Controlled by power unit.

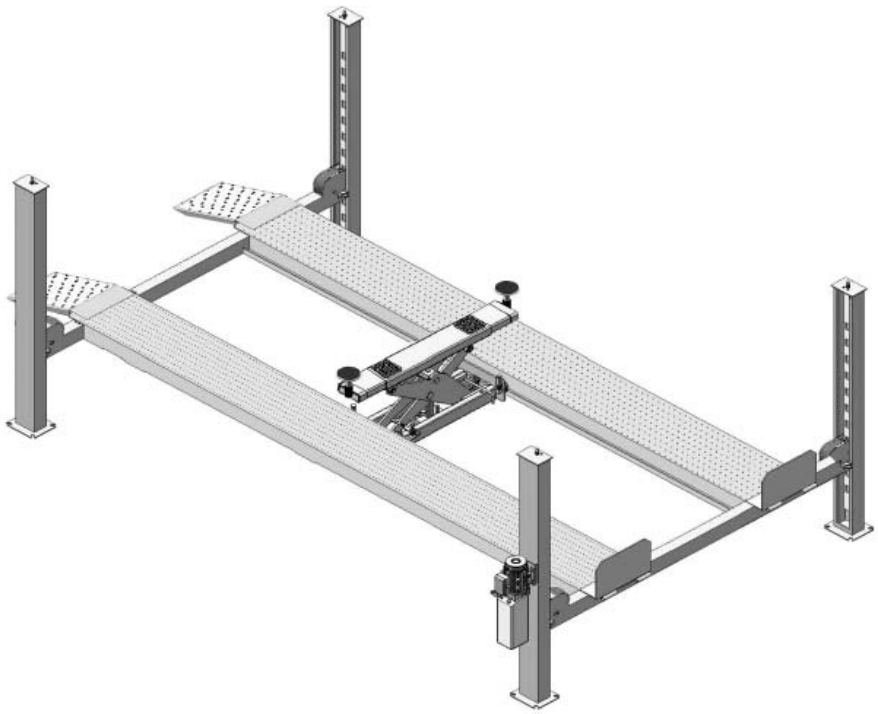

Fig. 1

Model	Lifting Capacity	Lifting Height	Lifting Time	Overall Length (Inc. Ramps)	Overall Width	Width Between Posts	Gross Weight	Motor
414	14,000 lbs	74″	60 S	256″	130 7/8″	116″	3200 lbs.	2.0 HP 220V 1 Phase

Installation Requirement

Tools Required

Rotary Hammer Drill (Φ19)	
Hammer	
Level Bar	
English Spanner (12”)	
Ratchet Spanner With Socket (28#)	
Wrench set (10#, 12#, 13#, 14#, 17#, 19#, 24#, 30#)	
Carpenter’s Chalk	
Screw Sets	
Tape Measure (25’)	
Pliers	
Socket Head Wrench (3#, 5#, 6#)	
Lock Wrench	

Fig. 2

Concrete Specifications

Specifications of concrete must be adhered to the specification as following. Failure to do so may result in lift and/or vehicle falling.

1. Concrete must be thickness 6” minimum and without reinforcing steel bars, and must be dried totally before the installation.

2. Concrete must be in good condition and must be of test strength 3,000psi (220kg/cm^2) minimum.

3. Floors must be level and no cracks.

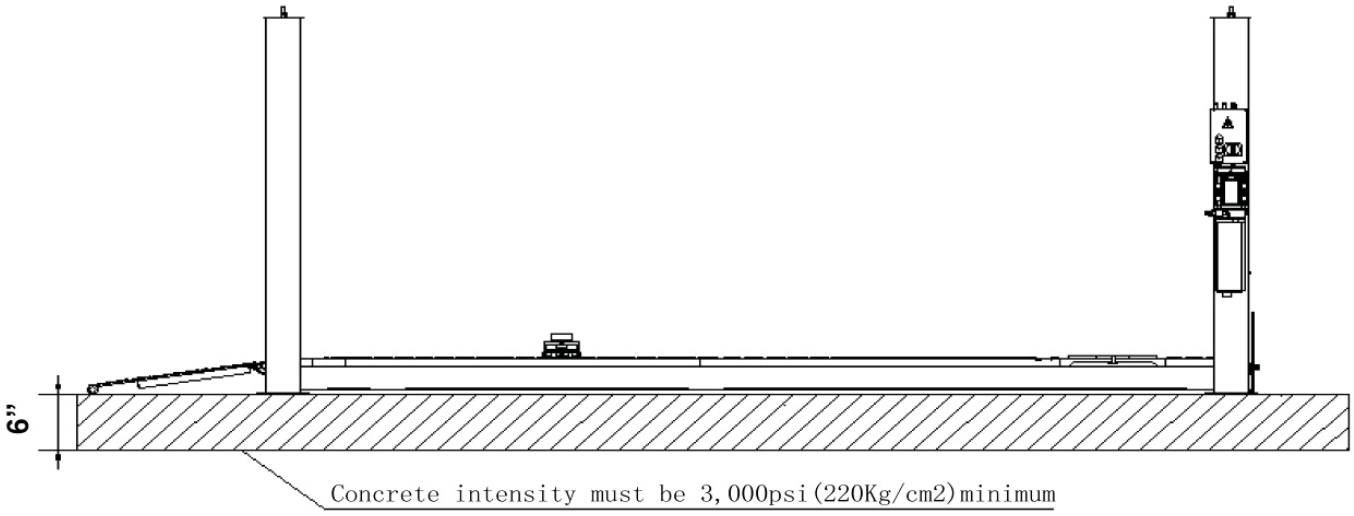

Fig. 3

Air Supply

Air pressure requirement: 75-120 psi, Air line size 8mm×6mm and 6mm×4mm.

Power Supply

The electric power unit must be greater than 2 horse power. Electrical wire must be a minimum of 10 gauge.

Steps Of Installation

A. Location Of Installation

Check and ensure the installation location (concrete, layout, space size etc.) is suitable for lift installation.

B. Check The Parts Before Assembly

1. Packaged lift and hydraulic power unit **(See Fig. 4)**.

Fig. 4

2. Open the outer packing carefully **(See Fig. 5)**.

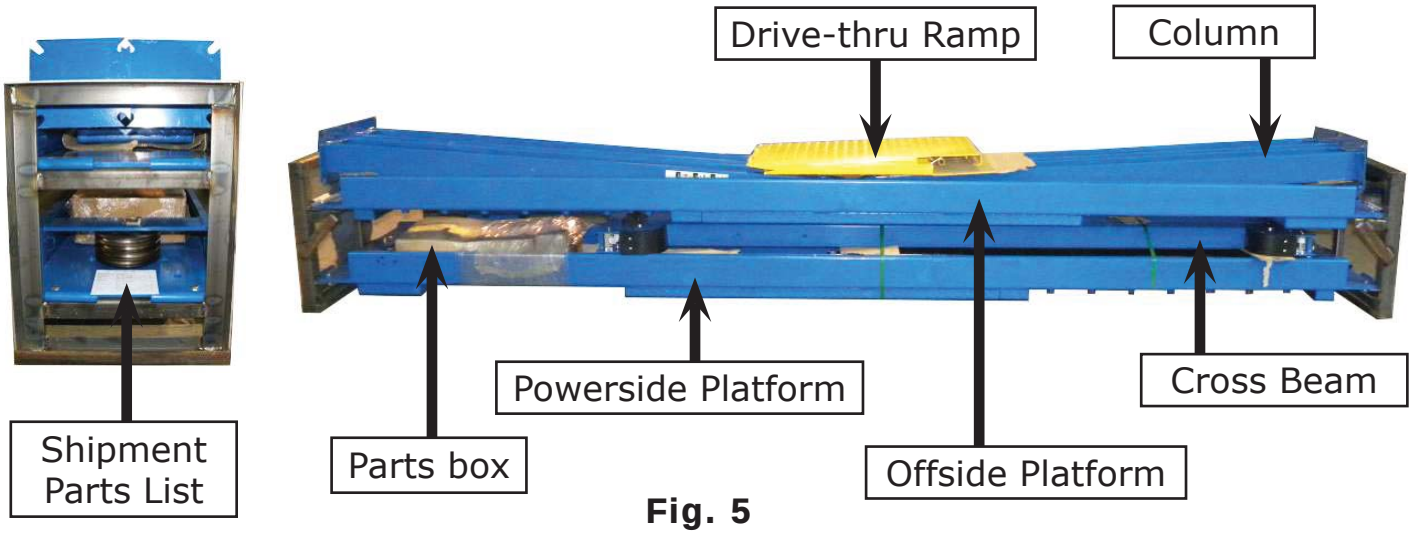

Fig. 5

3. Remove the Drive-thru Ramps and Columns **(See Fig. 6)**.

Fig. 6

4. Loosen the screws of the upper package stand, take off the offside platform, take out the parts inside the power side platform, than remove the package stand.

5. Move aside the parts and check the parts according to the shipment parts list. **(See Fig. 7).**

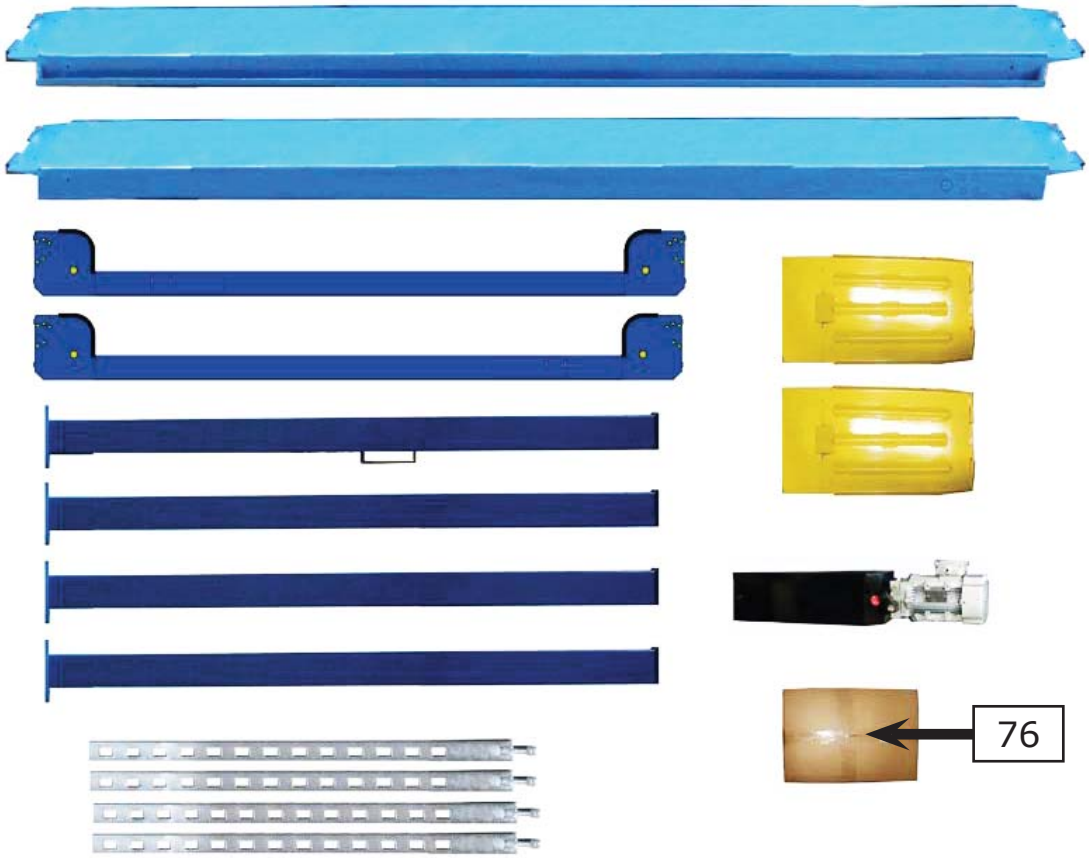

Fig. 7

6. Open the carton of parts and check the parts according to the parts box list (**See Fig. 8**).

Fig. 8

7. Check the parts of the parts bag according to the parts bag list **(See Fig. 9)**.

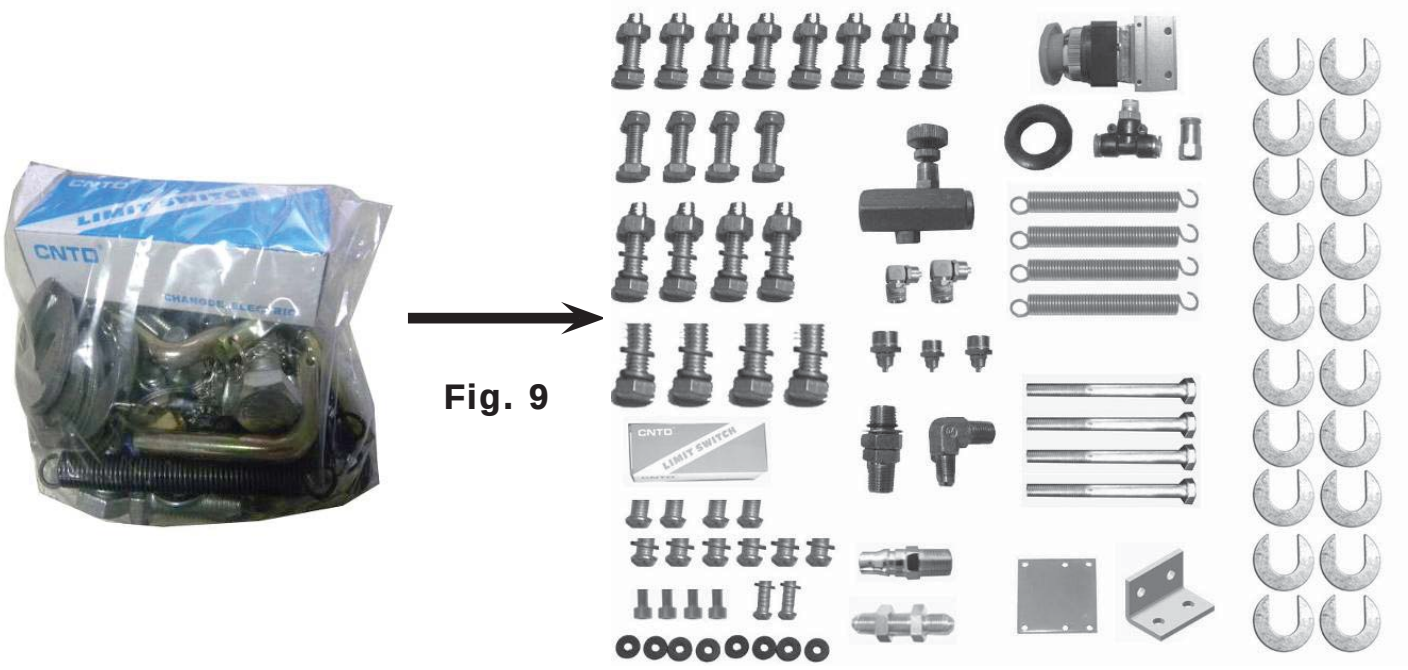

Fig. 9

C. Use A Carpenter's Chalk Line To Establish Installation Layout As Per Table 1

Make sure the size is right and base is flat **(see Fig. 10).**

Note: Reserve space before and behind the installation site.

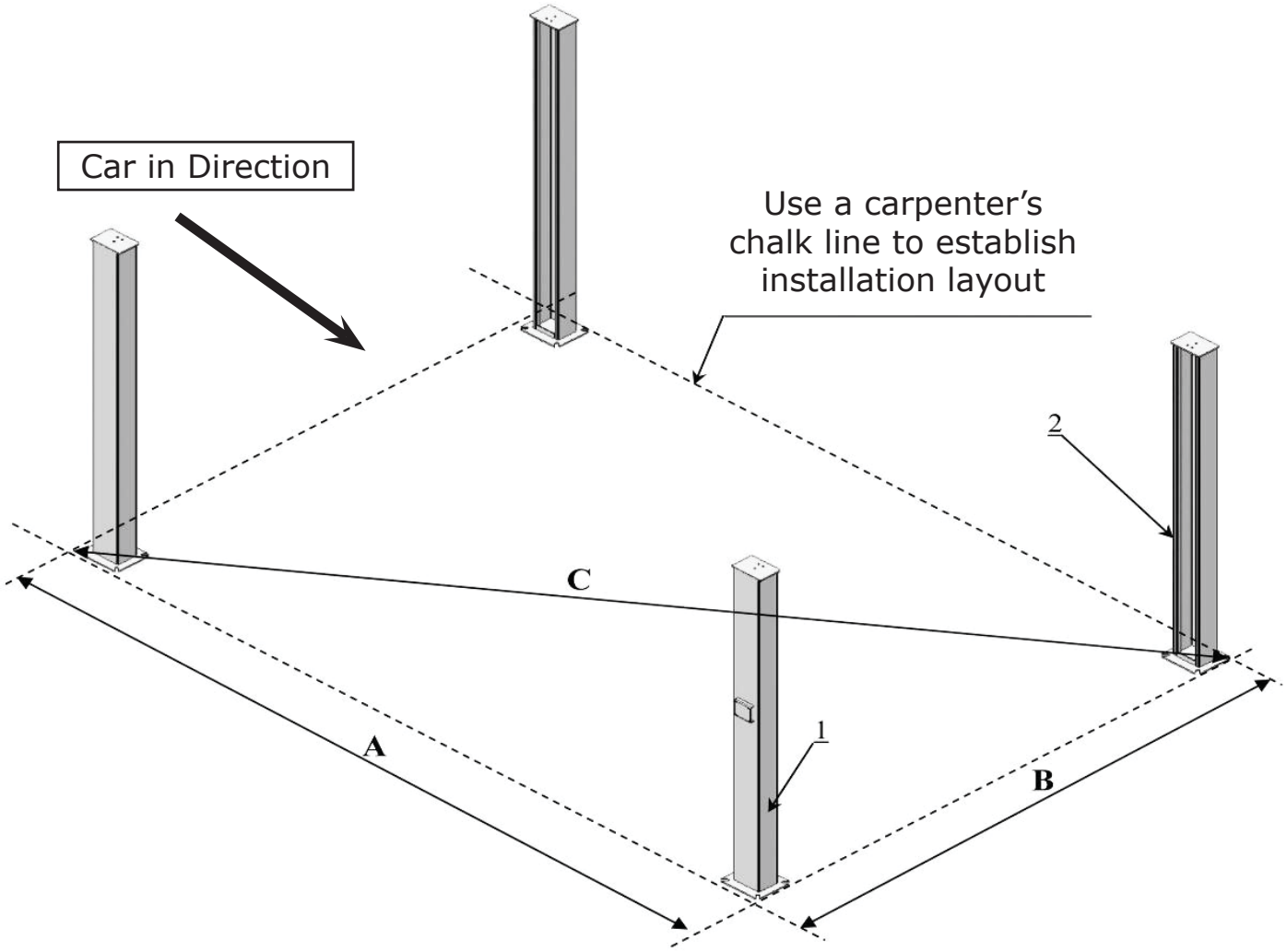

Fig. 10

MODEL	A	B	C
414	216 1/2″	130 7/8″	253″

Table 1

D. Install Cross Beams

Note: Install the runway platforms on the cross beams prior to drilling the anchor holes. This will help if measurements are incorrect. Do not fully tighten platform bolts.

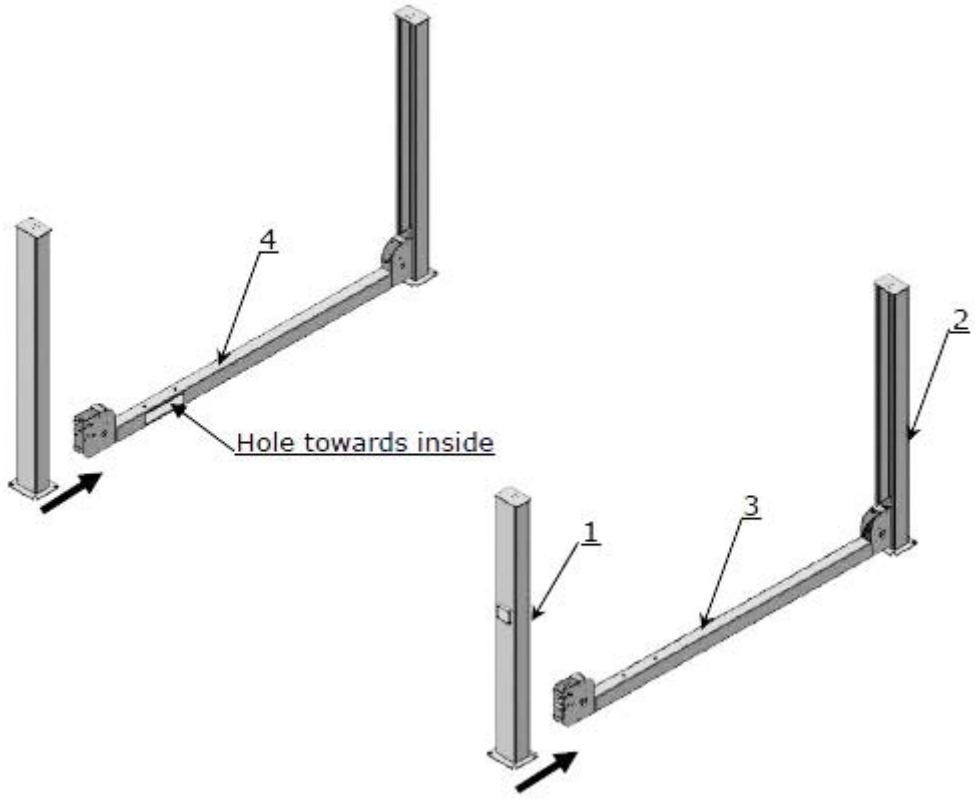

Fig. 11

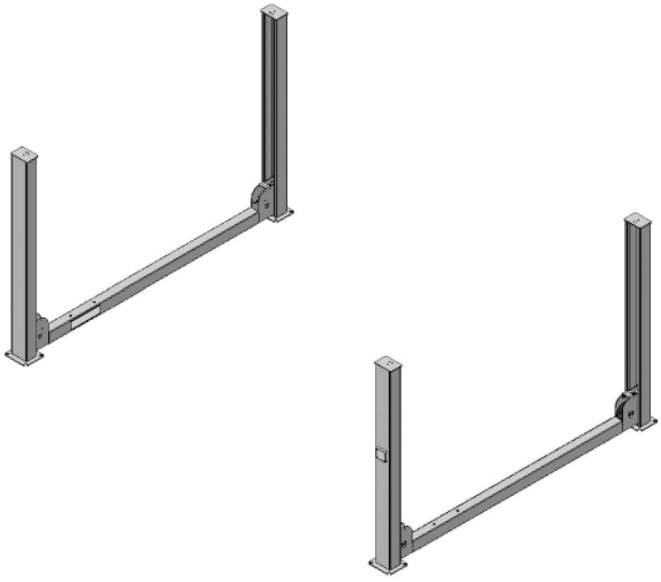

Fig. 12

E. Anchor Bolts

1. Prepare the Anchor Bolts **(See Fig. 13).**

Fig. 13

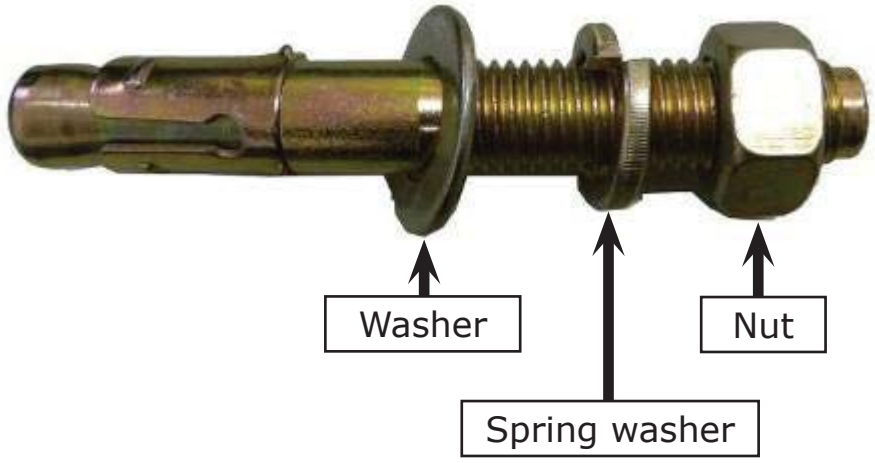

2. Use a the rotary hammer drill with a ¾ inch masonry bit and drill all the anchor holes and install the anchor bolts **(See Fig. 14).**

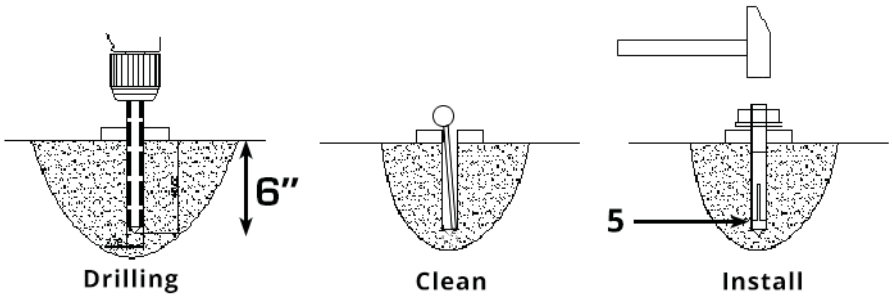

Fig. 14

F. Install The Safety Ladders

1. Take off the pulley safety cover and unscrew the four upper nuts on the Safety Ladders, and then adjust the four lower nuts so they are at the same level. Pull back on the cable safety lock on the Cross-beam to insert the Safety Lock Ladder in, raise the Safety Ladder, and thread the upper nuts. **(See Fig. 15).**

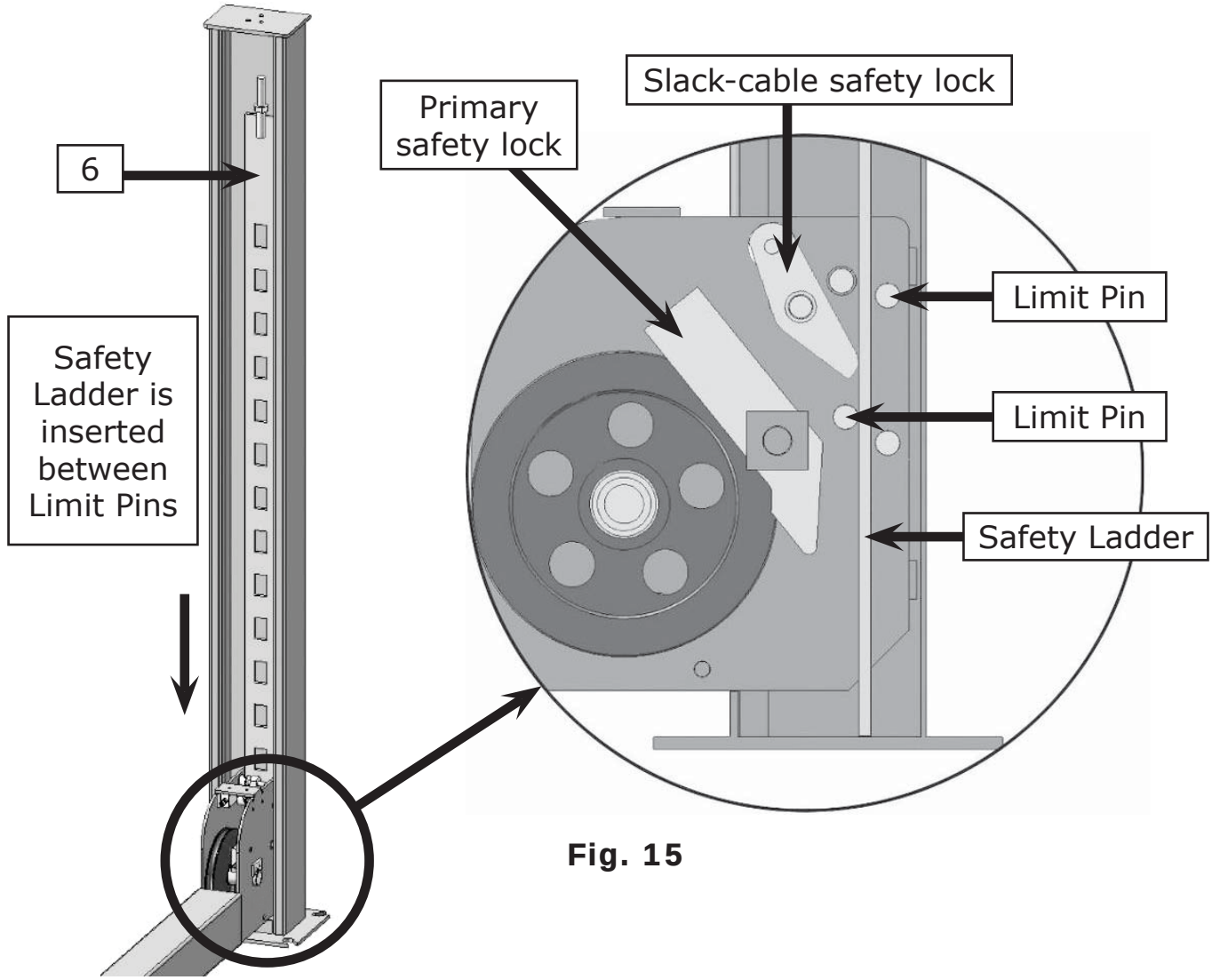

Fig. 15

2. Install safety ladders **(See Fig. 16).**

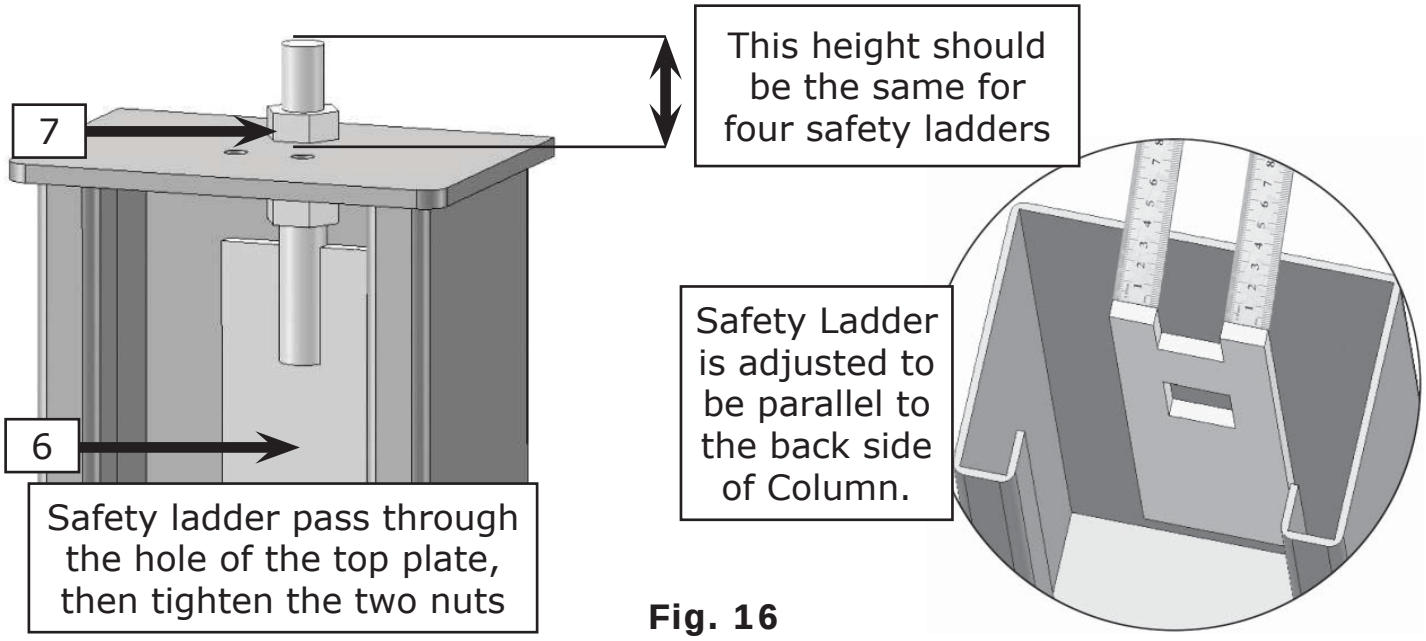

Fig. 16

G. Put The Cross Beams At The Same Height

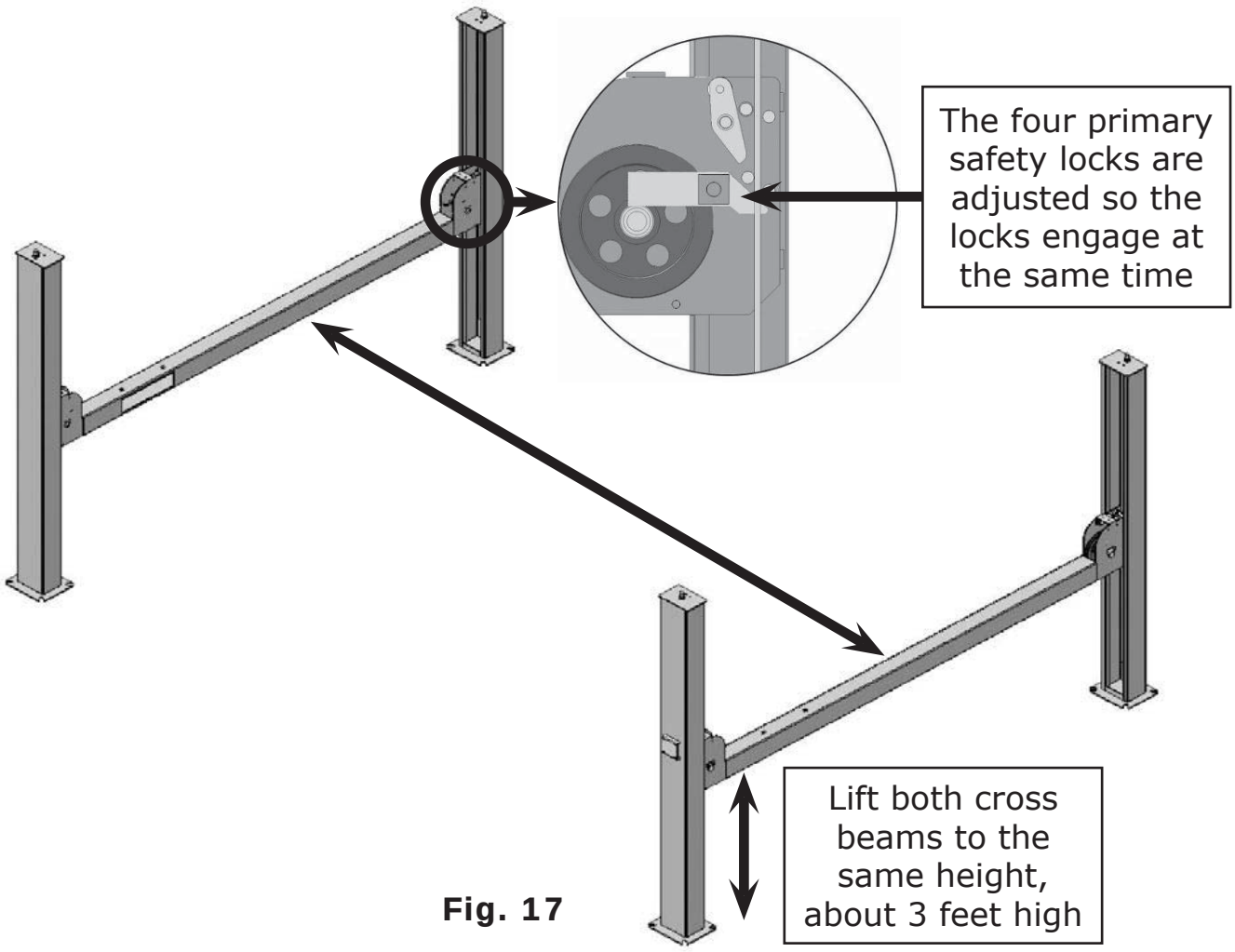

Fig. 17

H. Install Power Side Platform

1. Loosen one side of the pulley **(See Fig. 18).**

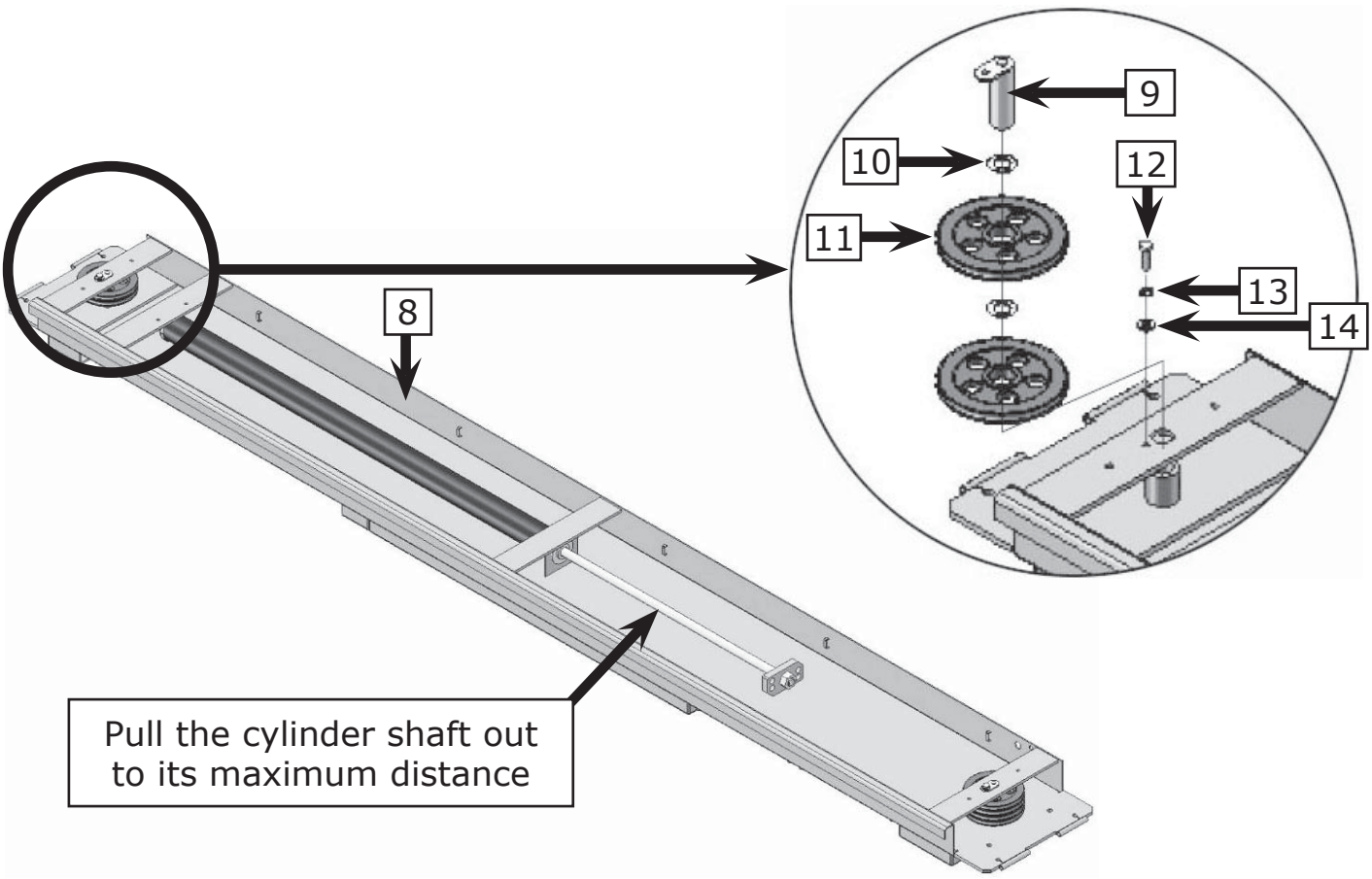

Fig. 18

2. Install the platform to Cross Beam with a forklift or other lifting device **(See Fig. 19).**

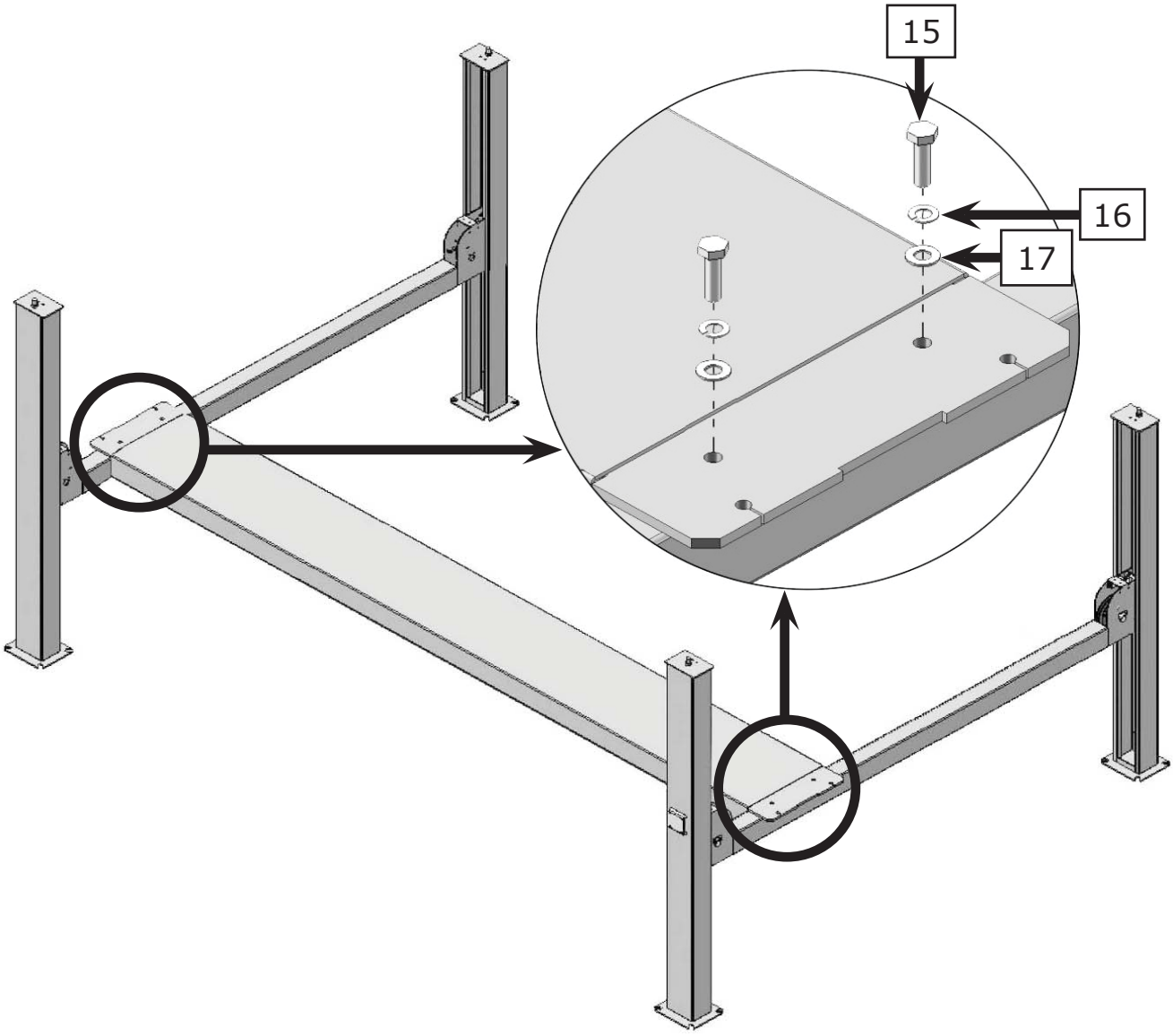

Fig. 19

I. Assemble The Pulleys Back To The Power Side Platform

Install the offside platform on the cross beams and check the plumb of columns with a level, adjust with the shims and tighten the Anchor Bolts (See Fig. 20).

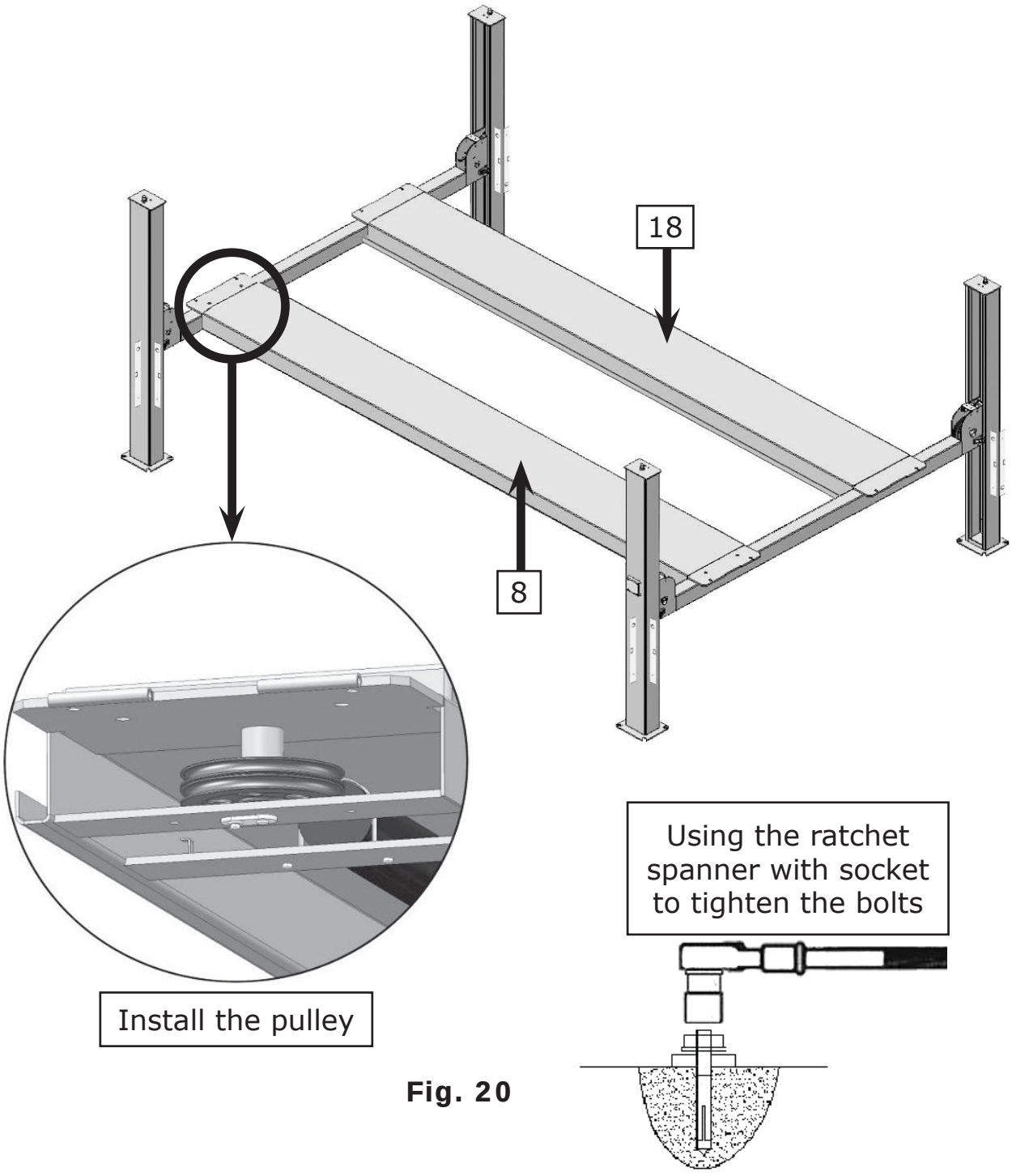

Fig. 20

J. Install Cables

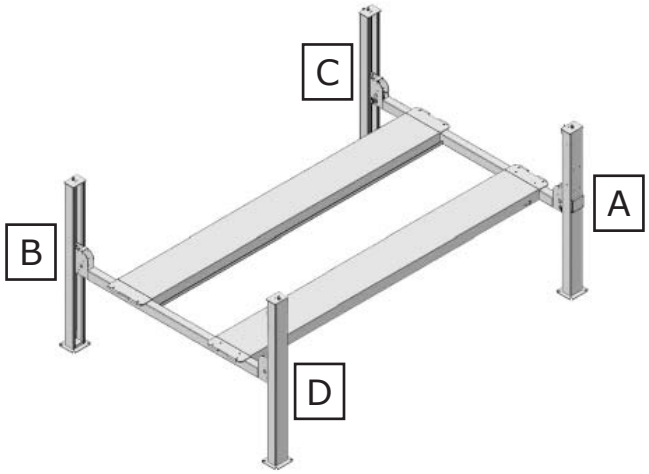

Cable \ NO.	①	②	③	④
Length (inc. connecting fitting)	4104 mm 161 5/8″	11058 mm 435 3/8″	5810 mm 228 3/4″	9354 mm 368 1/4″

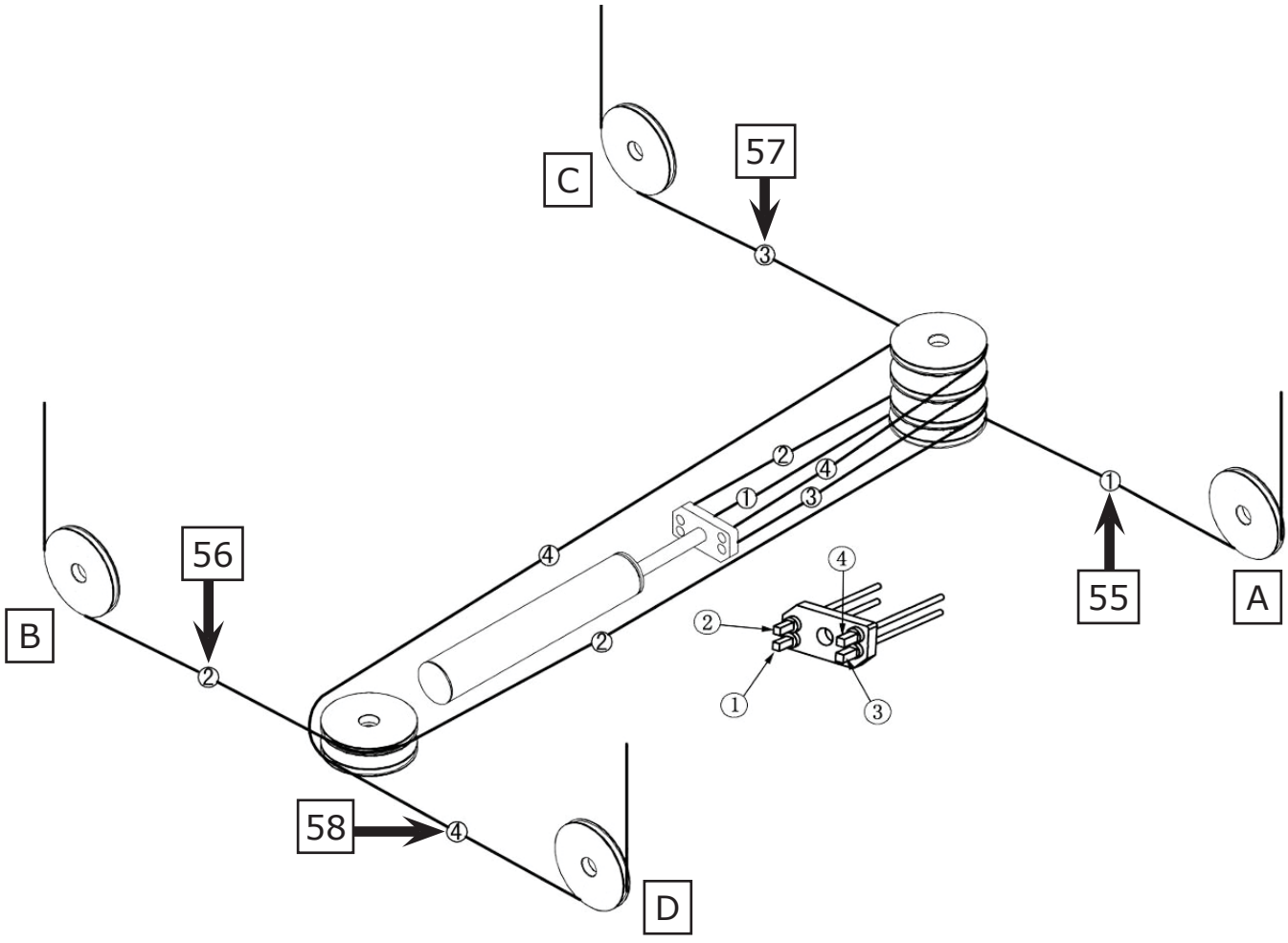

Fig. 21

1. After routing the cables through the pulleys, attach the cables to the connecting plate. **(See Fig. 22).**

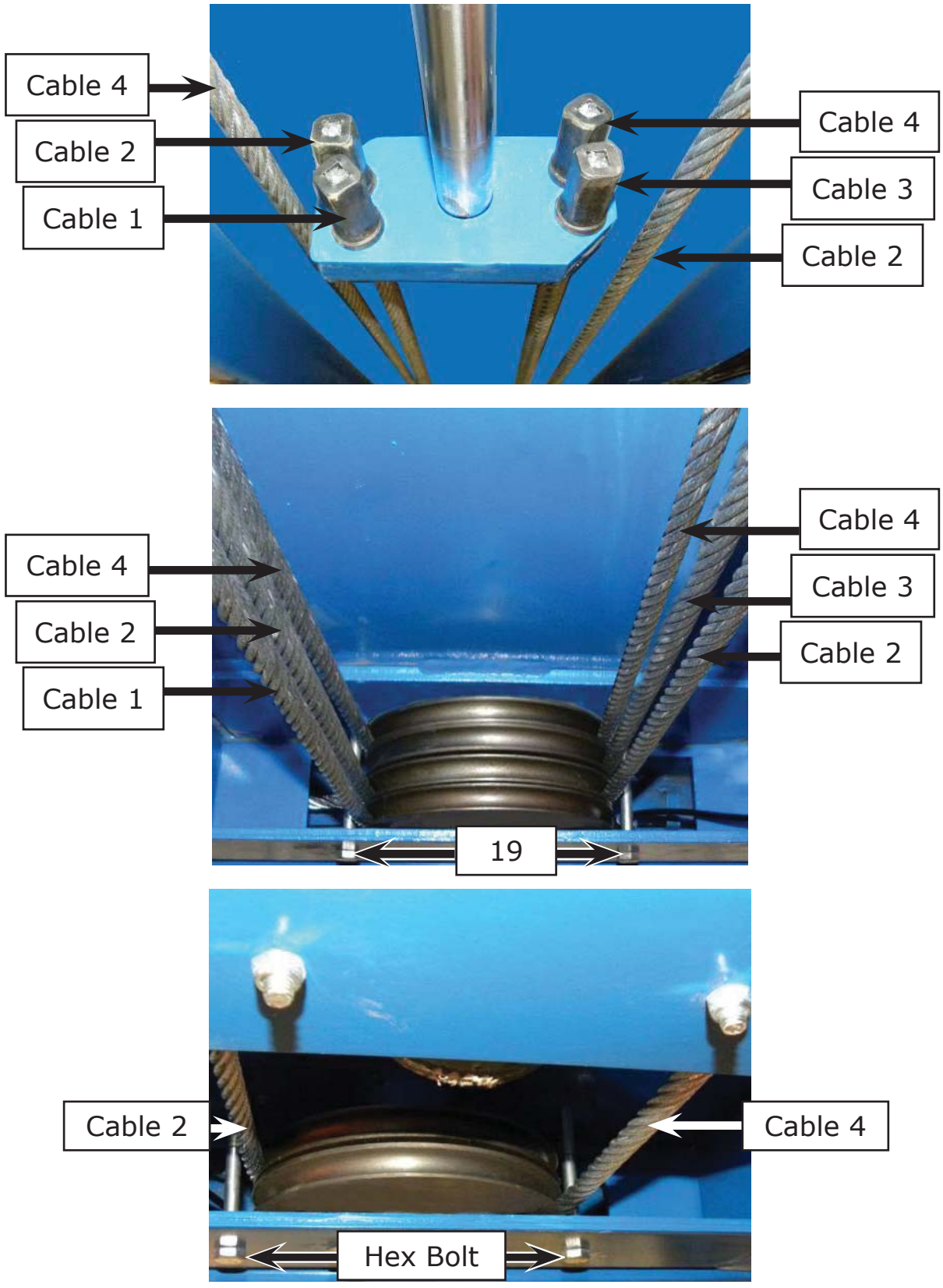

Fig. 22

2. The cable passes through Cross Beam and top plate on the column. Install the cable nuts **(See Fig. 23).**

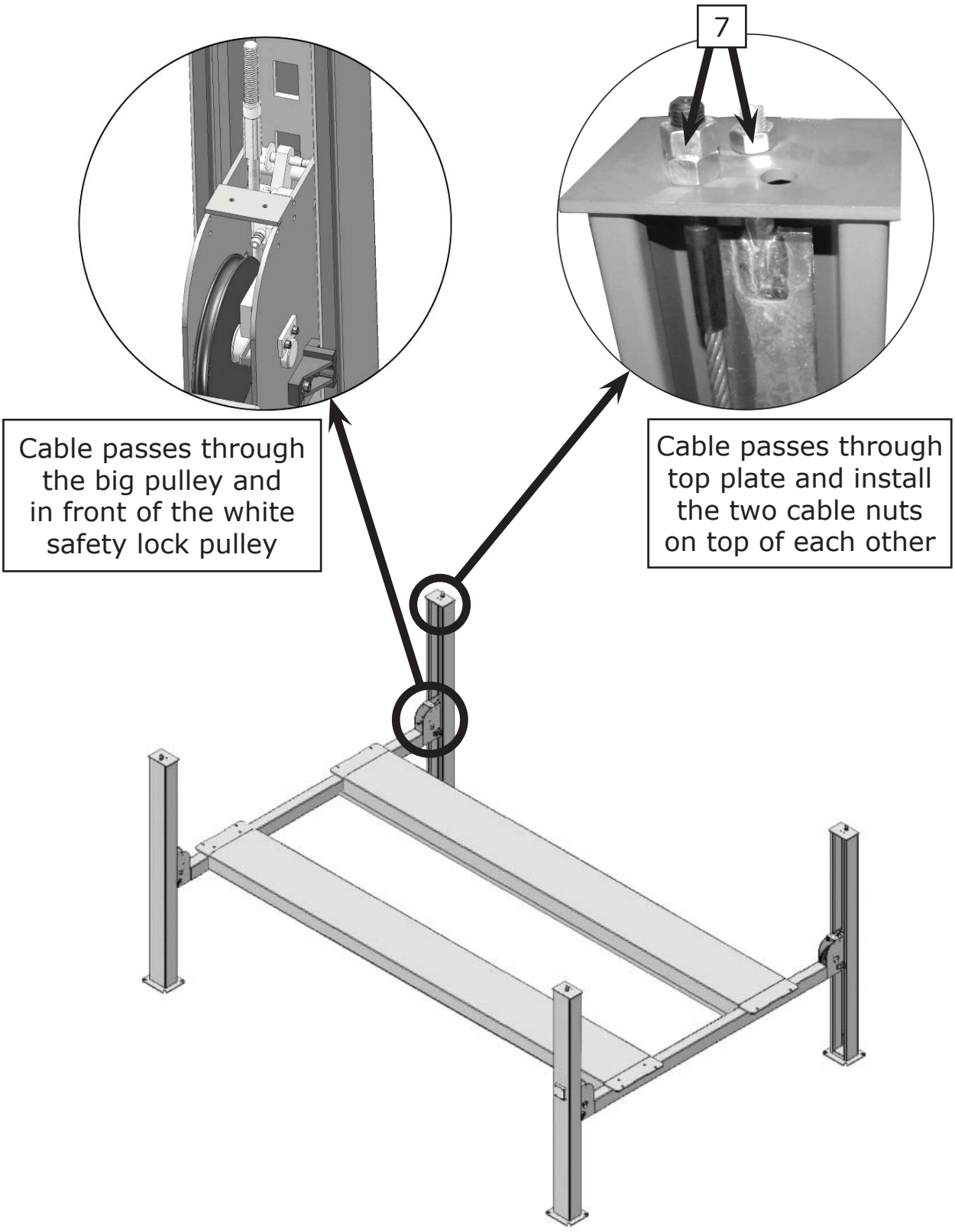

Fig. 23

K. Install The Water Separator, The Manual Control Air Valve, And The Power Unit

Note: If after connecting the air valve to an air supply the air constantly leaks from the valve, then the air valve is installed upside down. Remove the air fittings, invert the air valve, and Re-install the air fittings.

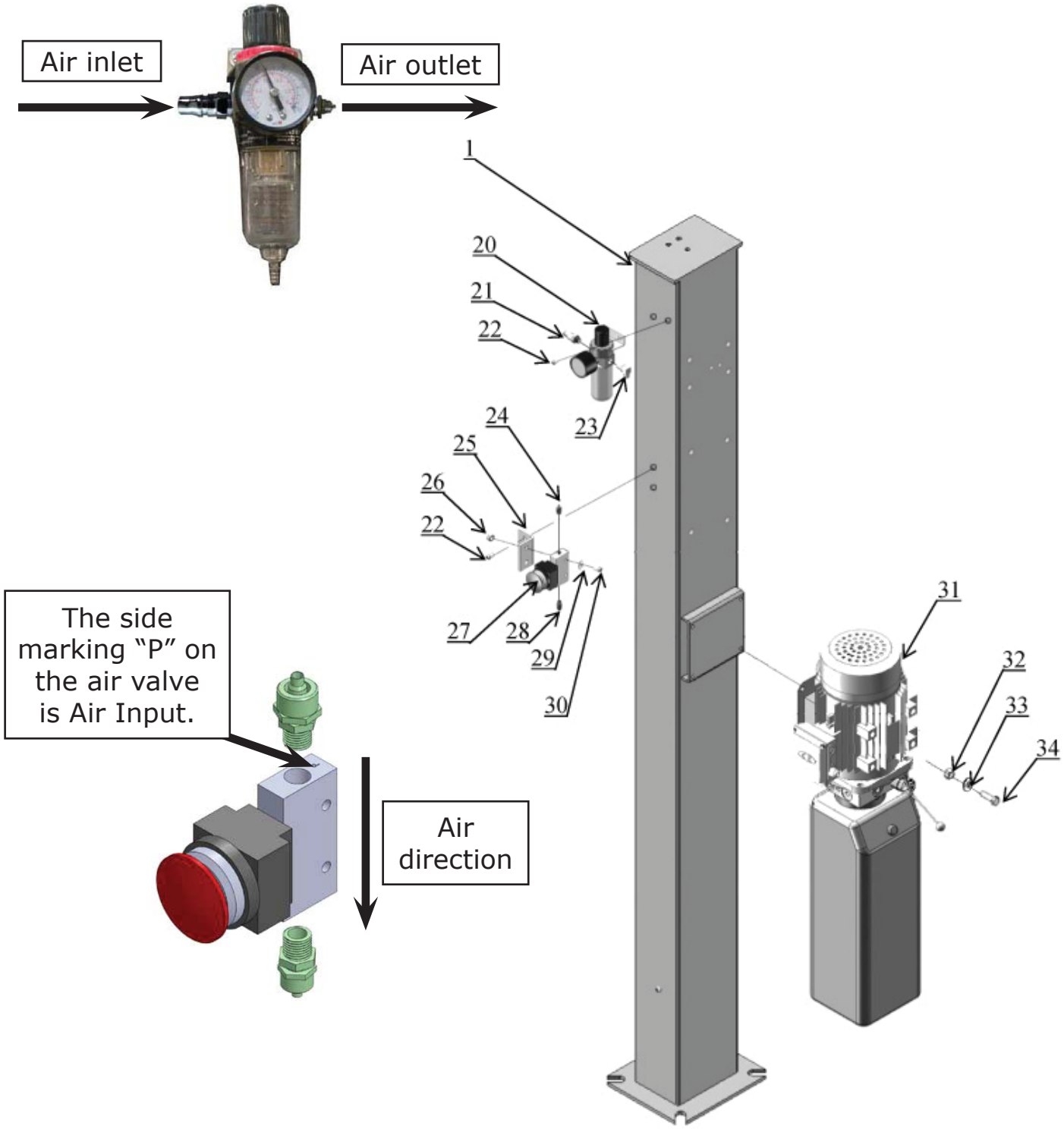

Fig. 24

L. Install Hydraulic System

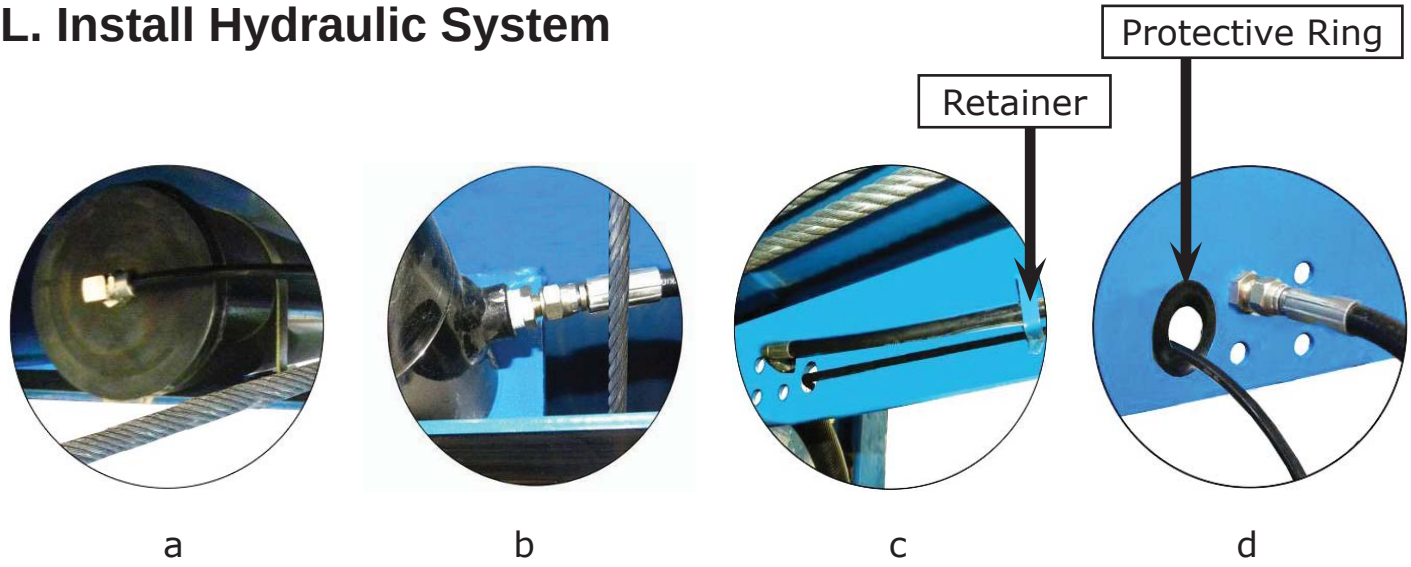

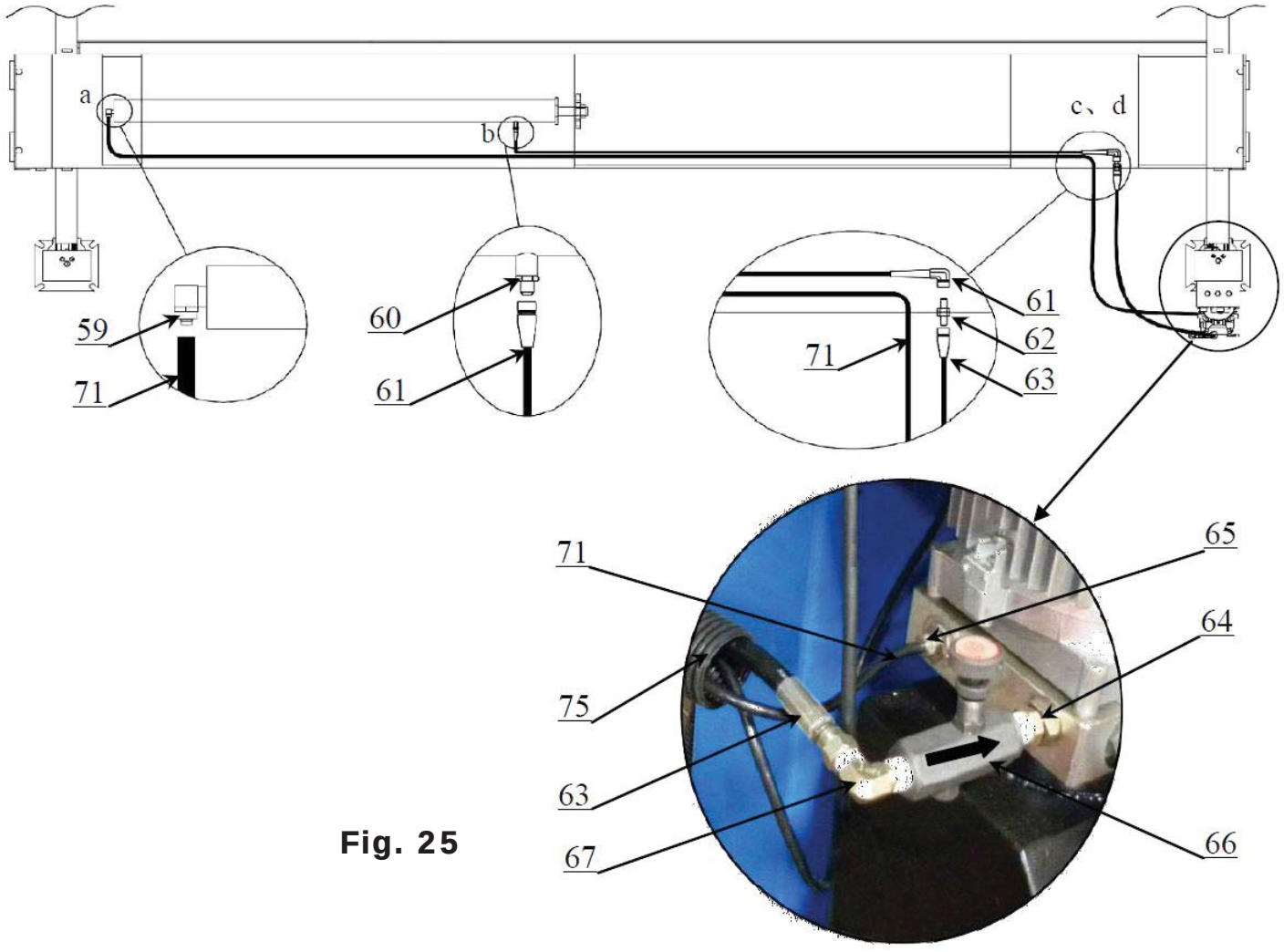

Fig. 25

M. Install Air-Line System

1. Connect the front and rear Cross Beam air lock cylinders by using 6mm×4mm black air line **(See Fig. 26).**
2. Connect manual air control valve using 6mm×4mm black air line.

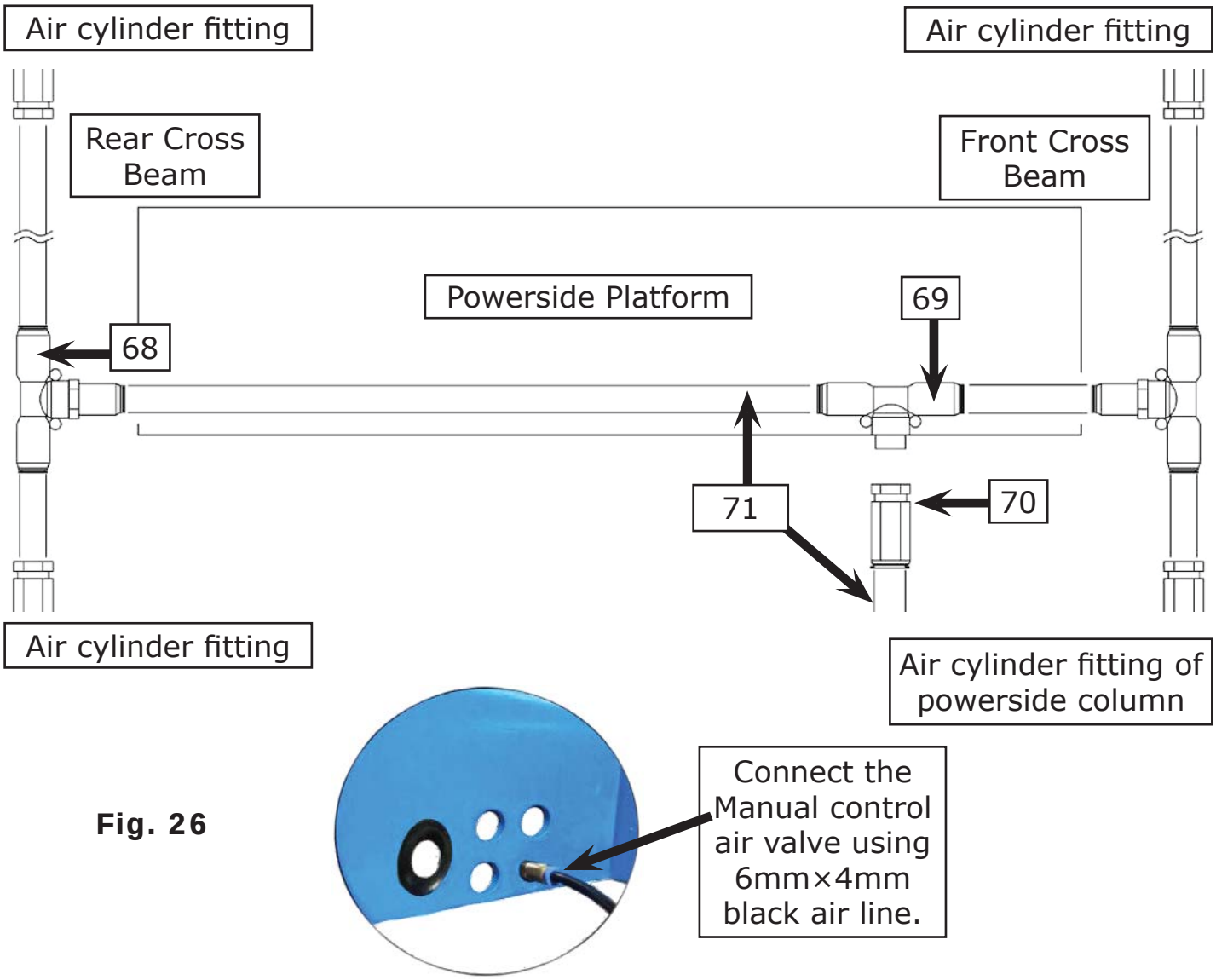

Fig. 26

3. Connect the oil hoses and air lines **(See Fig. 27)**.

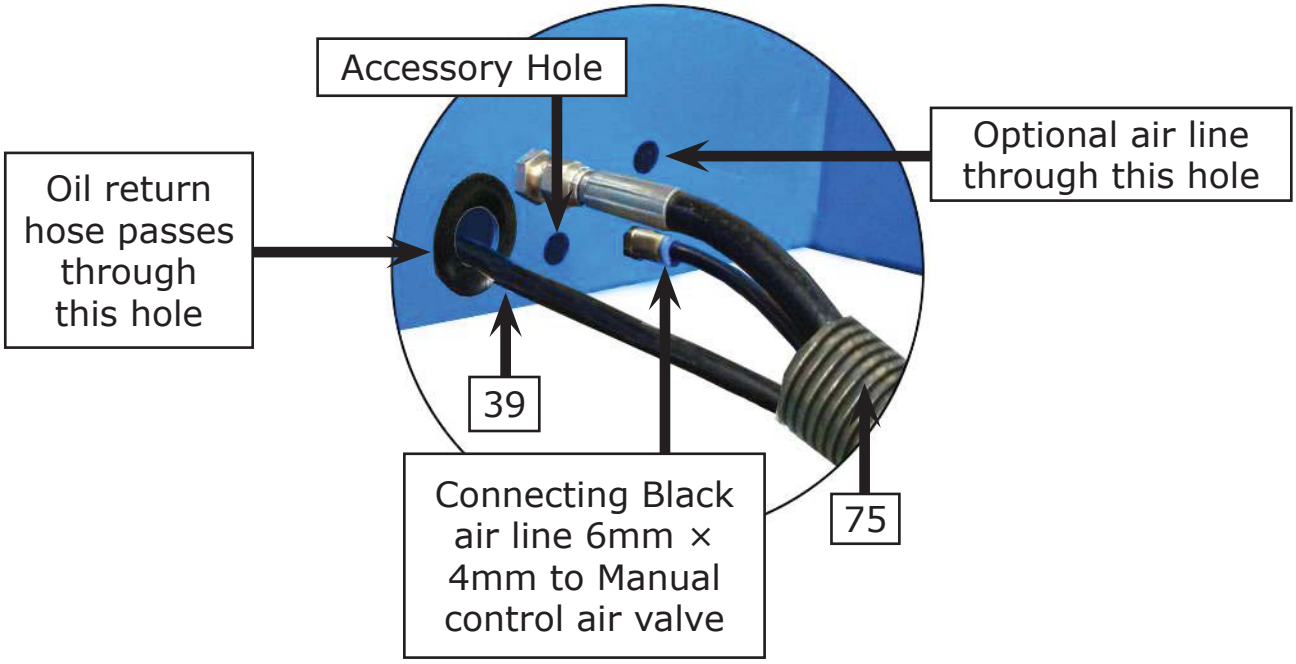

Fig. 27

4. Connect the water separator and manual control air valve using air line 8mm×6mm **(See Fig. 28)**.

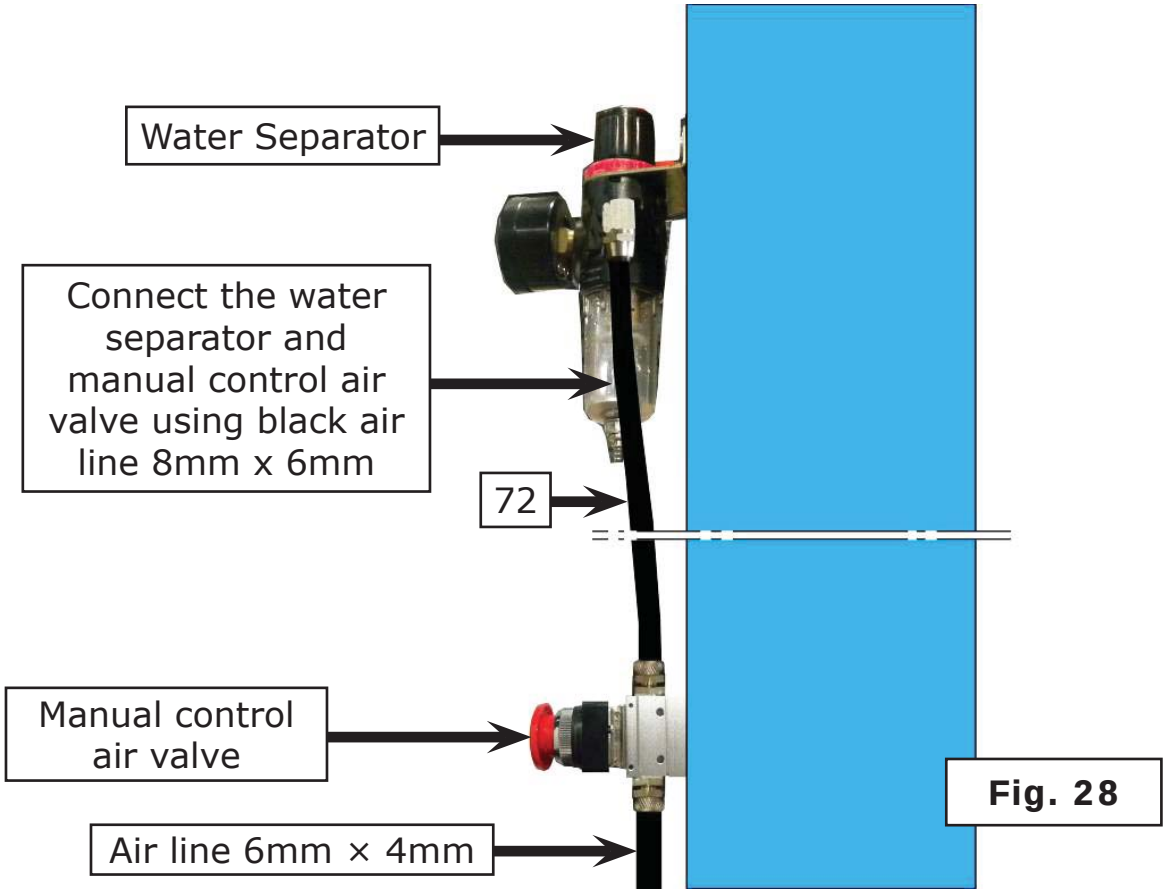

Fig. 28

5. Connect the air 1/4NPT air inlet (not supplied). Adjust the air pressure on the water separator regulator between 75-120 PSI **(See Fig. 29)**.

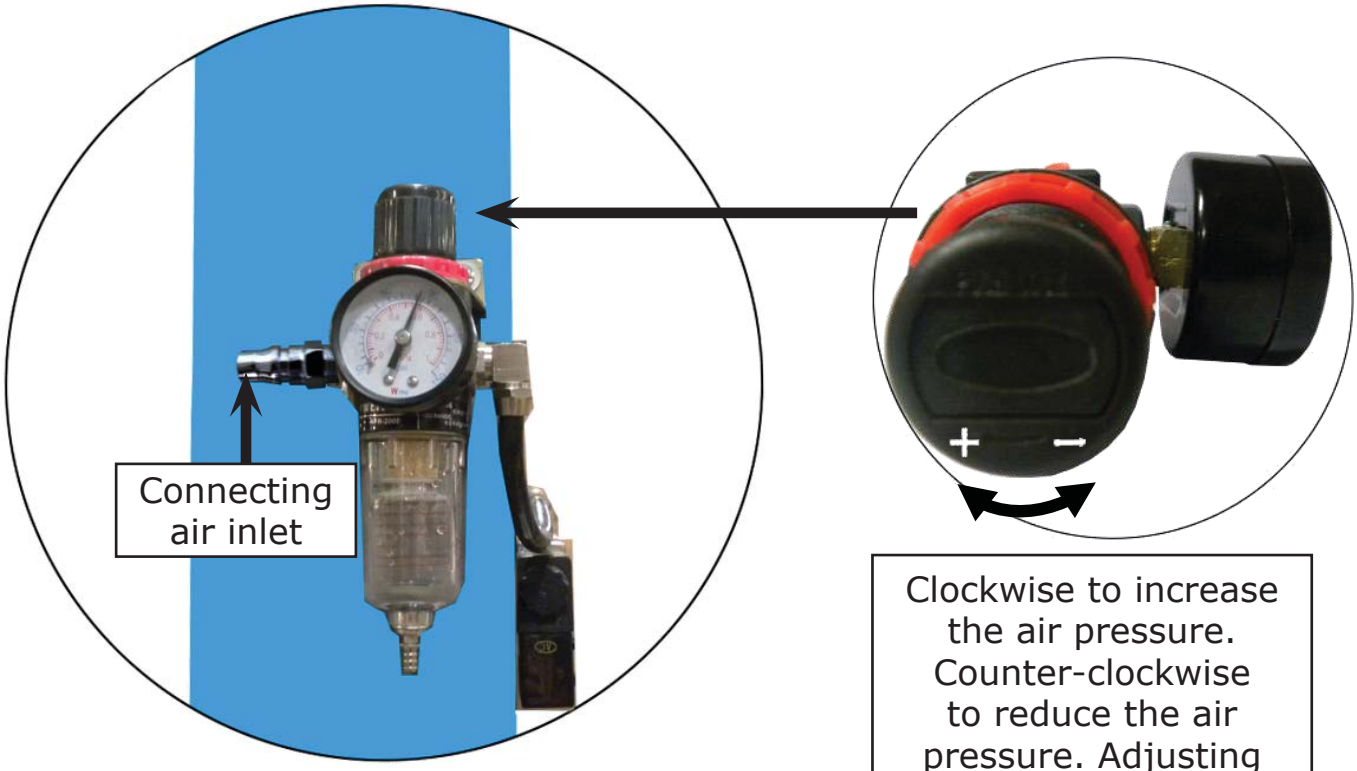

Fig. 29

N. Install Electrical System

1. Adjust the angle of the shaft on the limit switch when installed on the column **(See Fig. 30)**.

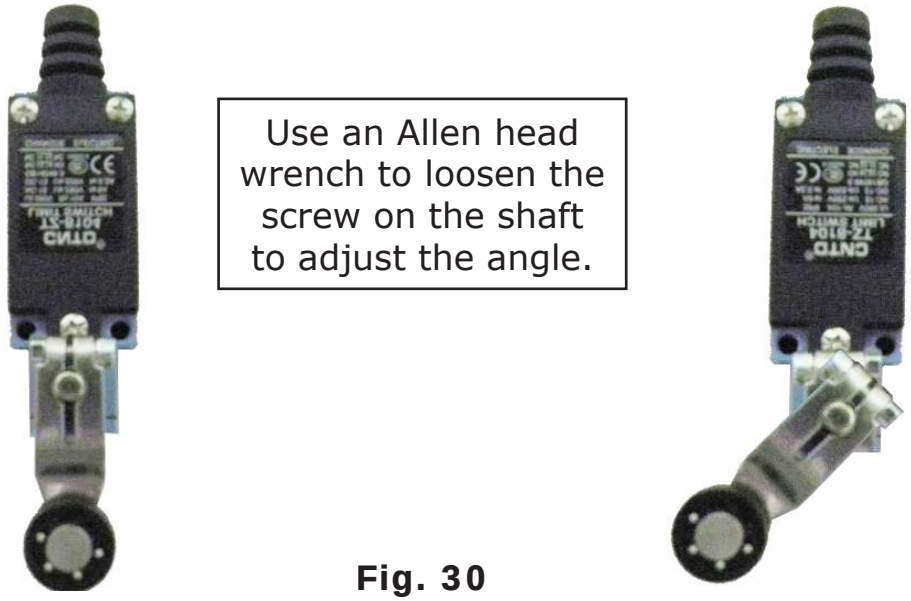

Fig. 30

2. Connect the limit switch with the cable wire. Connect wires to terminals **#11 & #12 (See Fig. 31)**.

Fig. 31

3. Install limit switch on the column **(See Fig. 32)**.
4. Insert the limit switch cable through the plastic protective sleeve **(See Fig. 33).**

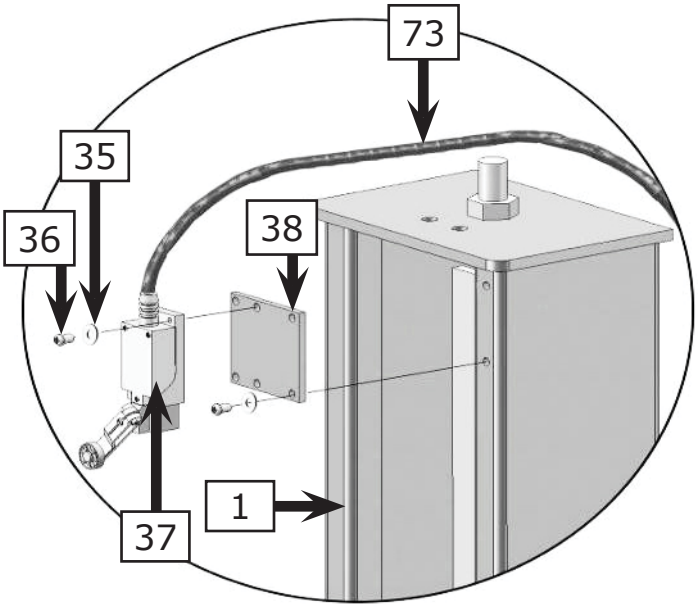

Fig. 32

Fig. 33

O. Electrical Connections

Note: For the safety of operators, the power wiring must contact the floor well.

Atlas Single Phase Motor (See Fig. 34).

1. Connect the two power supply lines (fire wire **L** and zero wire **N**) to terminals on the AC contactor marked **L2, L3**.
2. Connect the two motor wires to terminals on the AC contactor marked **T2, T3**.
3. Connect **A2** to **L3** on the AC contactor. It May already be installed (short jumper wire).
4. Connecting the Limit Switch: Remove the line of Connecting Terminal **4#** on the up button and **A1** on the AC contactor **(See Fig. 35)**. Then connect wire **12#** on the Limit Switch with Terminal **4#** on the control button and connect wire **11#** with terminals **A1** on the AC contactor. **(See Fig. 36)**

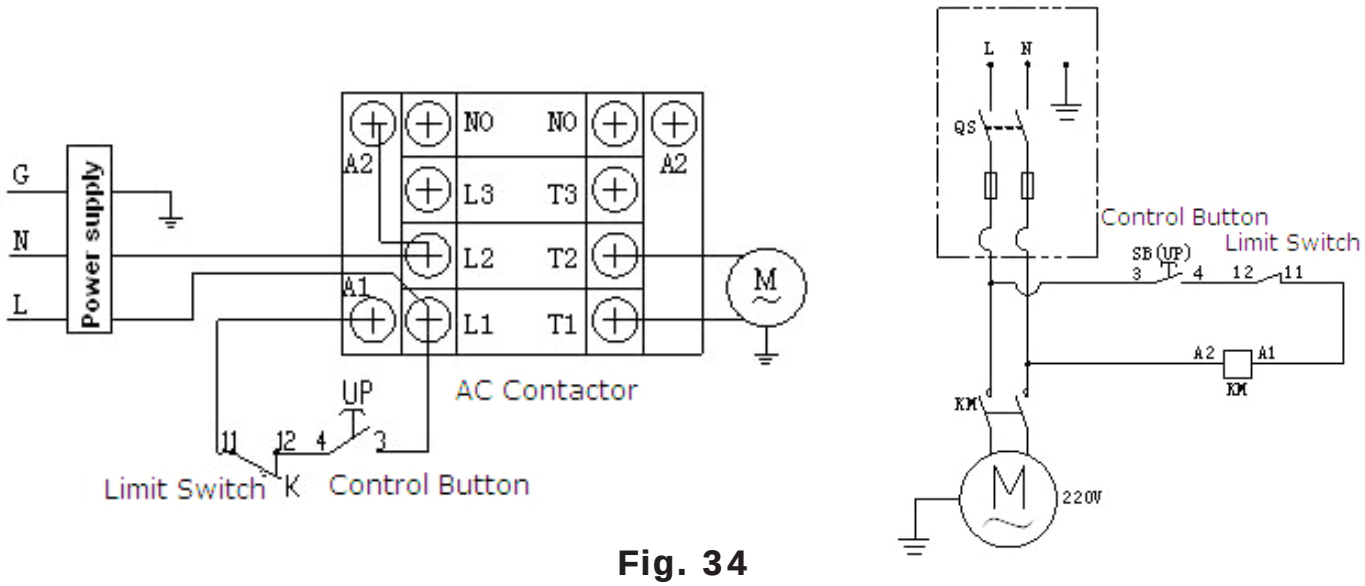

Fig. 34

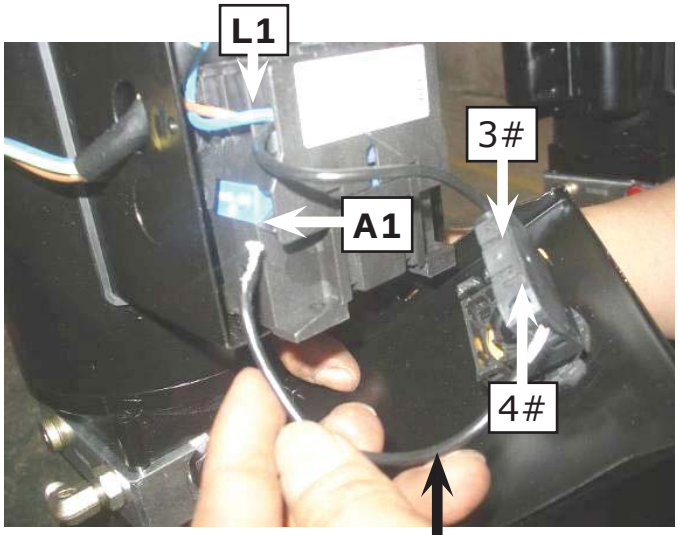

Fig. 35

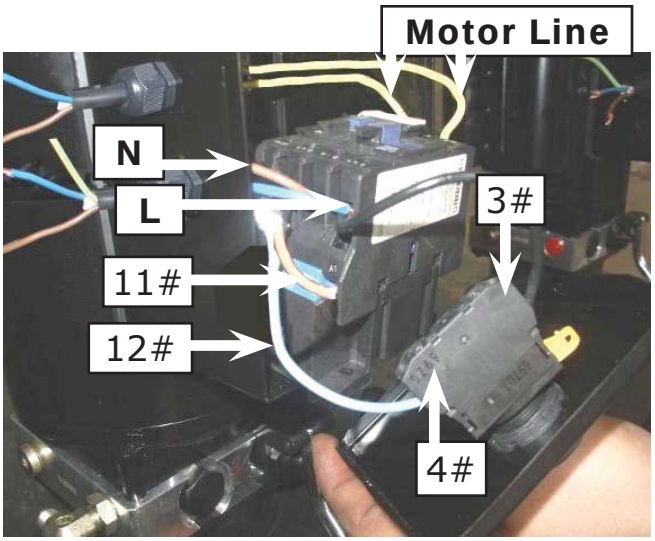

Fig. 36

P. Install Spring And Safety Cover Of Cross Beam

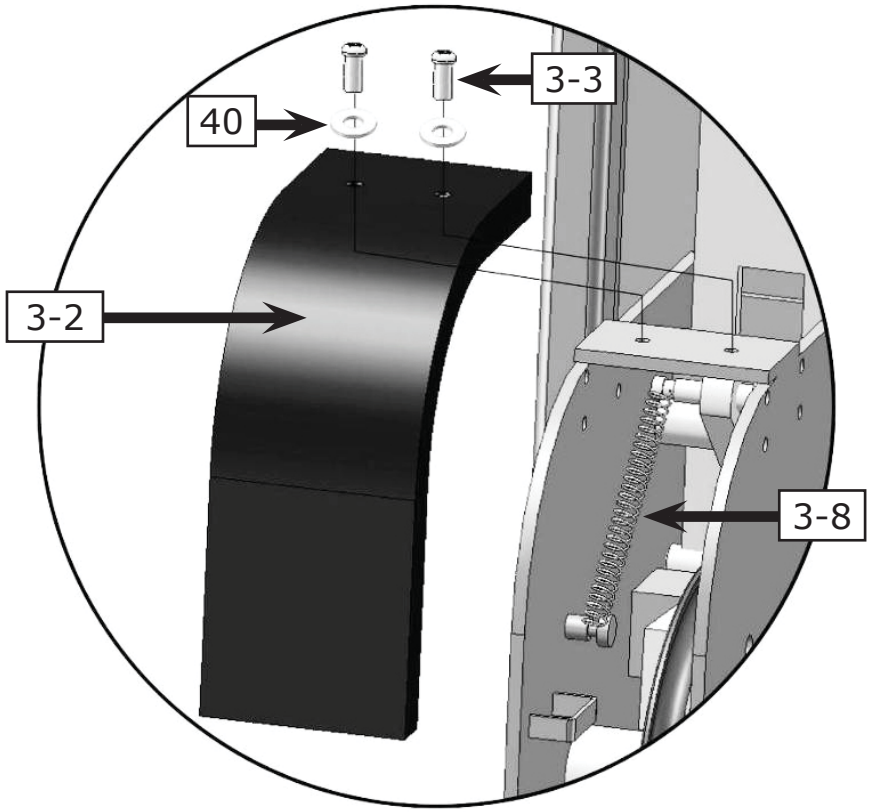

Fig. 37

Q. Install Drive-On Ramp, Tire Stop Plate, Platform Locks Plates

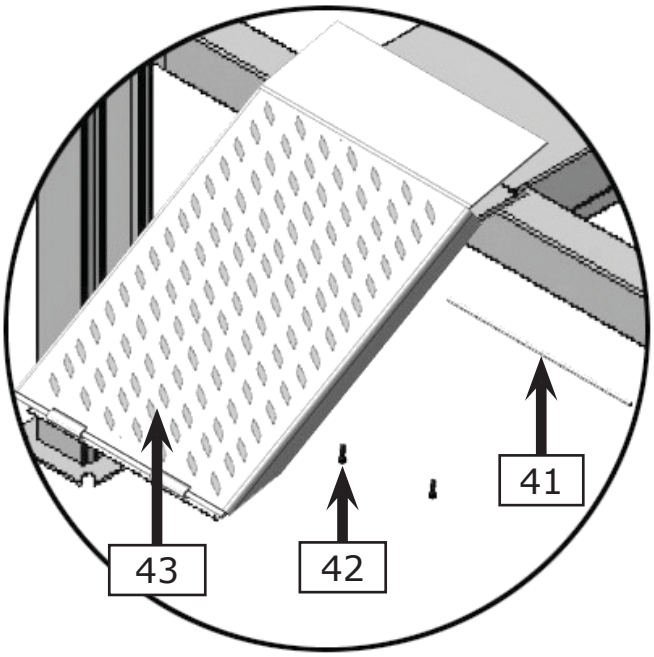

Install Drive-on ramp

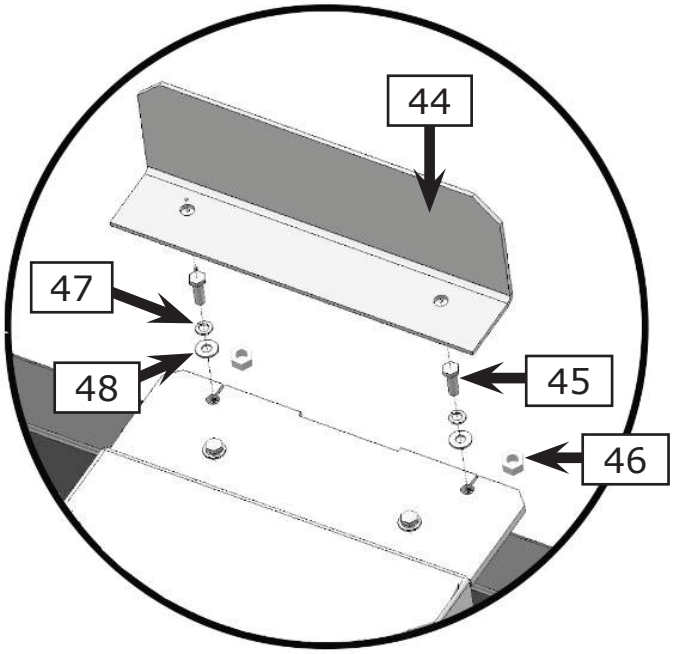

Install Tire stop plate

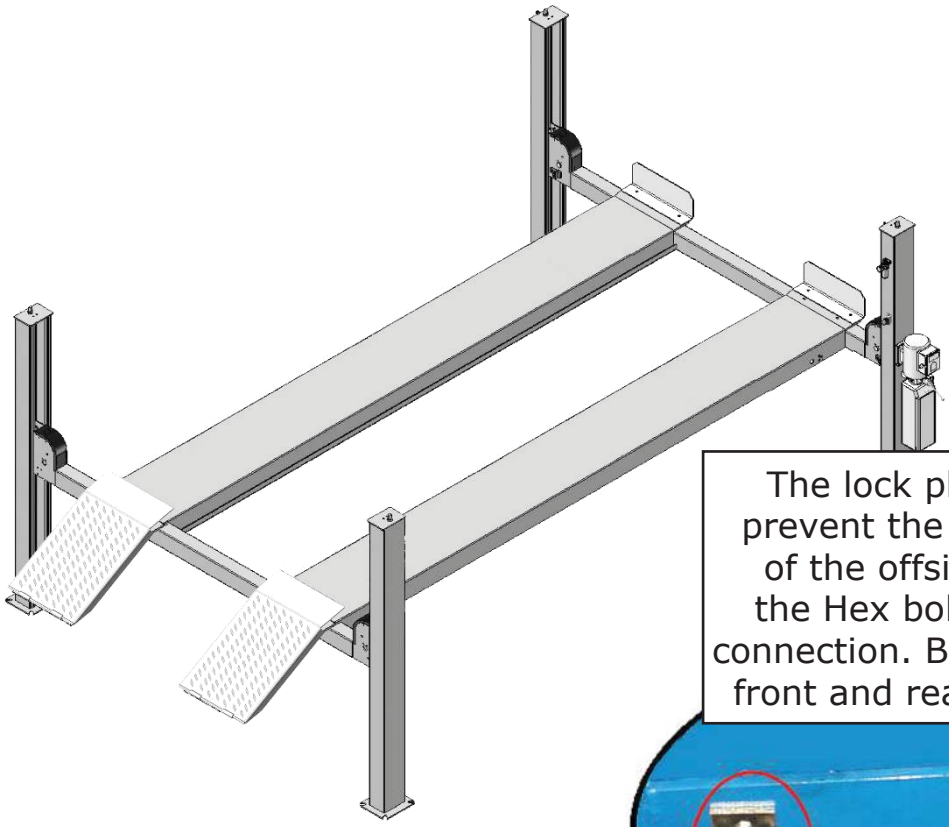

The lock plates are used to prevent the turning & slipping of the offside platform. Use the Hex bolts M8×20 for the connection. Bolt the plates to the front and rear on the platform.

Fig. 38

Exploded View

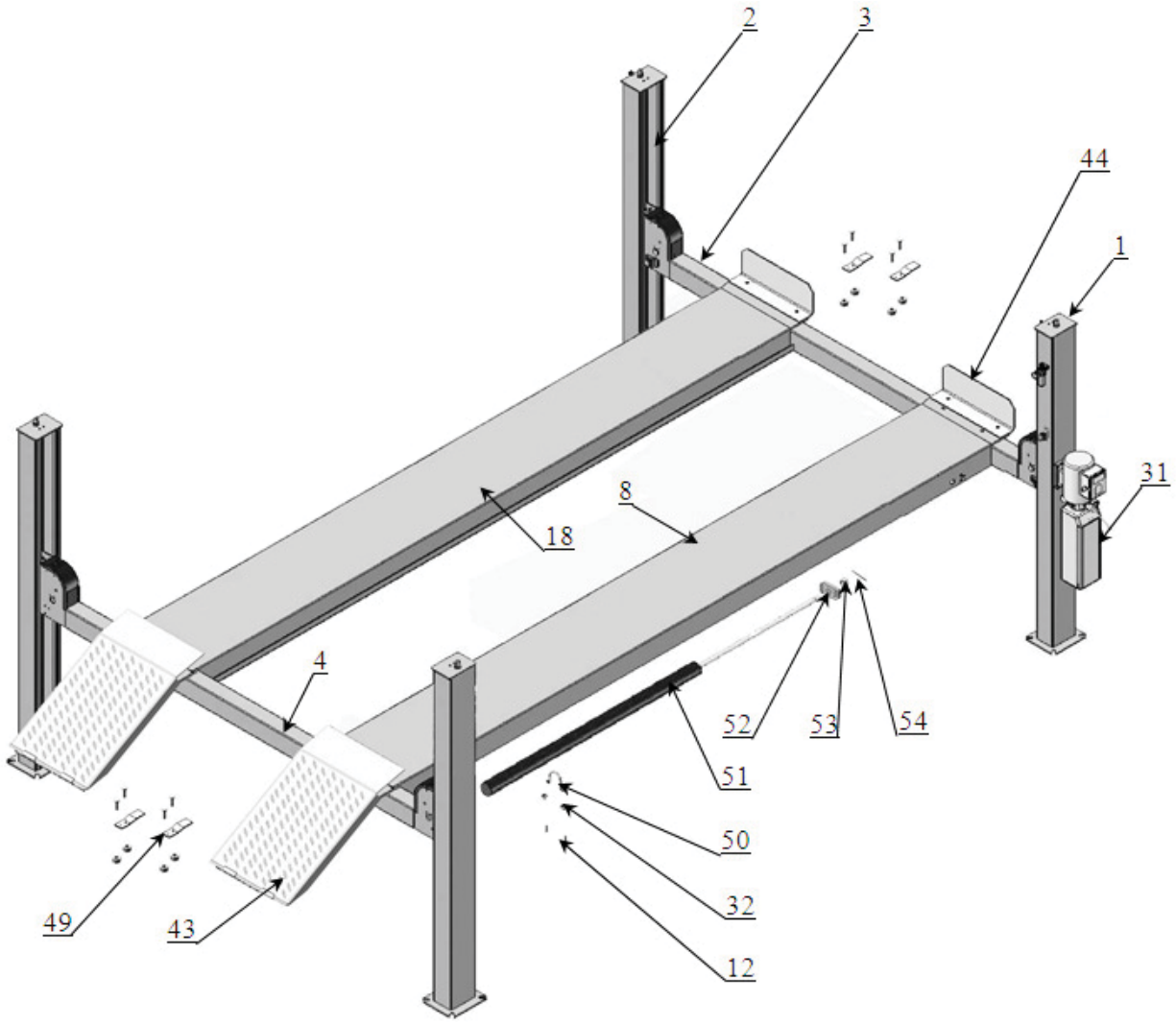

Fig. 39

CROSS BEAM

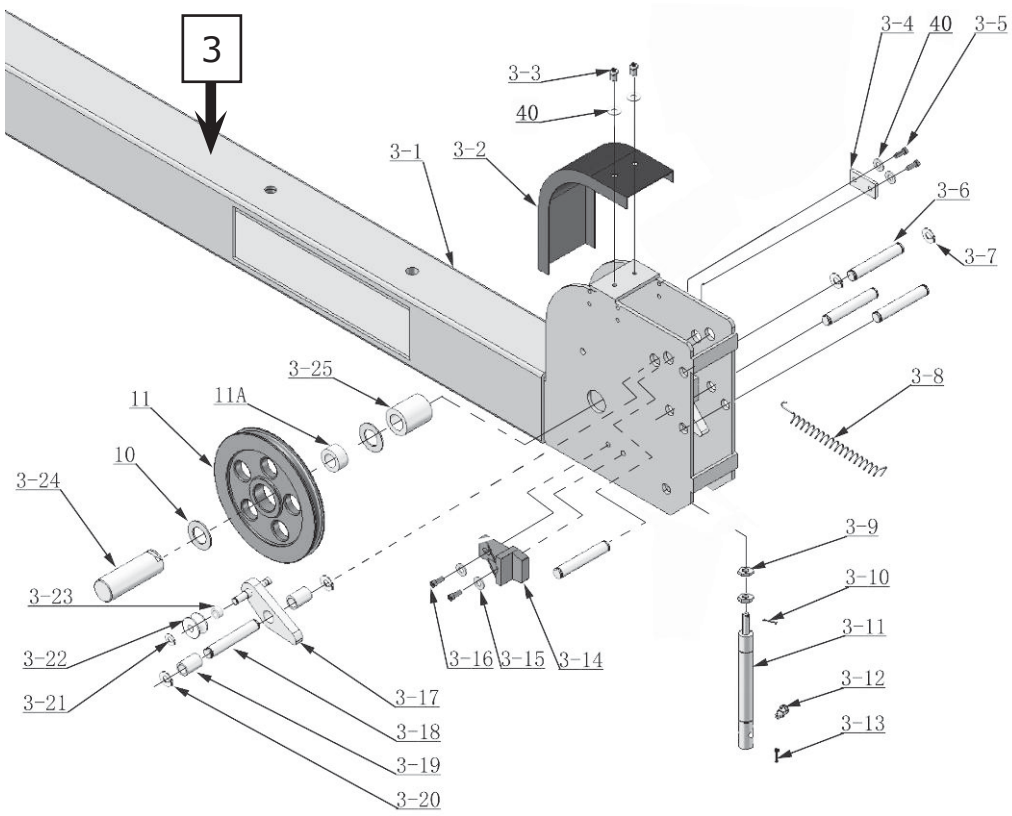

Fig. 40

CYLINDERS

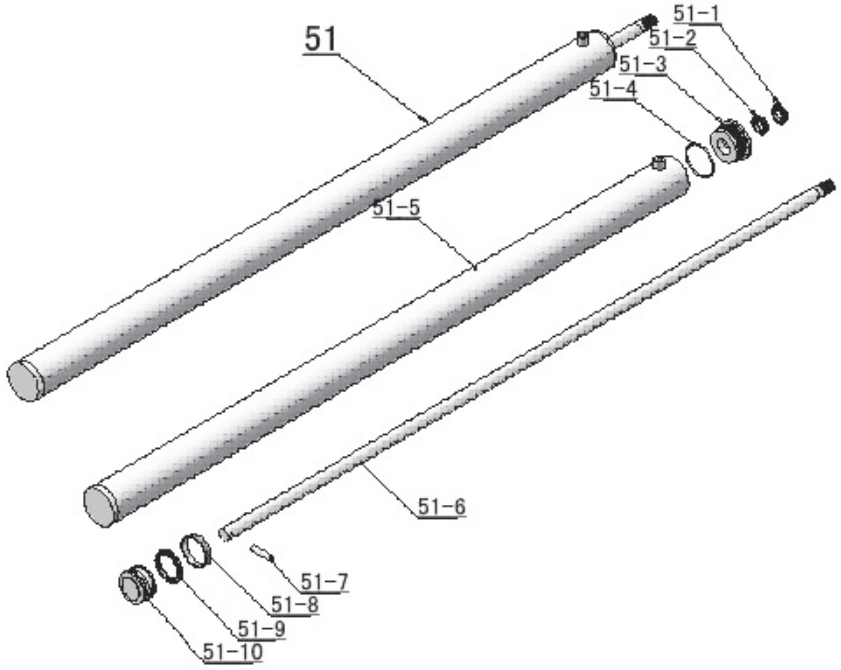

Fig. 41

POWER UNIT

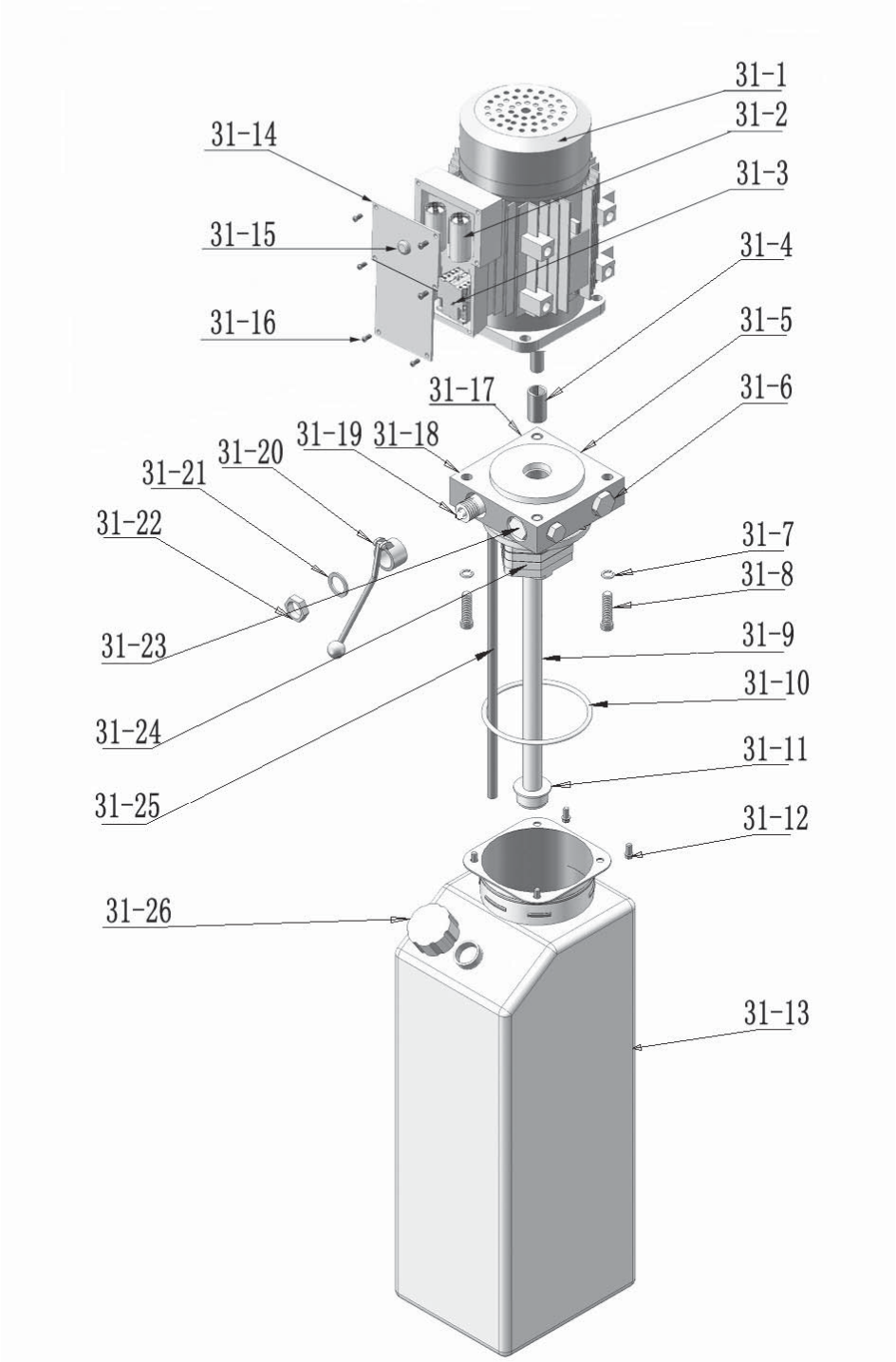

Fig. 42

Test Run

1. Fill the reservoir with approximately 3.75 gallons of AW46 Hydraulic Oil.
2. Press UP ↑ button, the cables will tighten up. Make sure the cables are in the pulley grooves.
3. Press the Handle of release valve to lock the Cross-beam to the safety ladders, and then adjust the platforms to be level by adjusting the nuts of Safety Ladders.
4. Adjust the cable fitting Hex nuts so the platforms and four safety locks click at the same time. Run the lift up and down several times while listening for the safety locks to click at the same time.
5. Adjust the clearance between the post and the plastic slider of Cross-beam to about 2 mm, and then tighten the fixing nut of slider.
6. After finishing the above adjustment, test run the lift with a load. Run the lift with the platforms in low position first, make sure the platforms move up and down at the same time and the safety devices can lock and release at the same time. Test run the lift completely to the top. Repeat steps if necessary.

Circuit Diagram of Hydraulic System

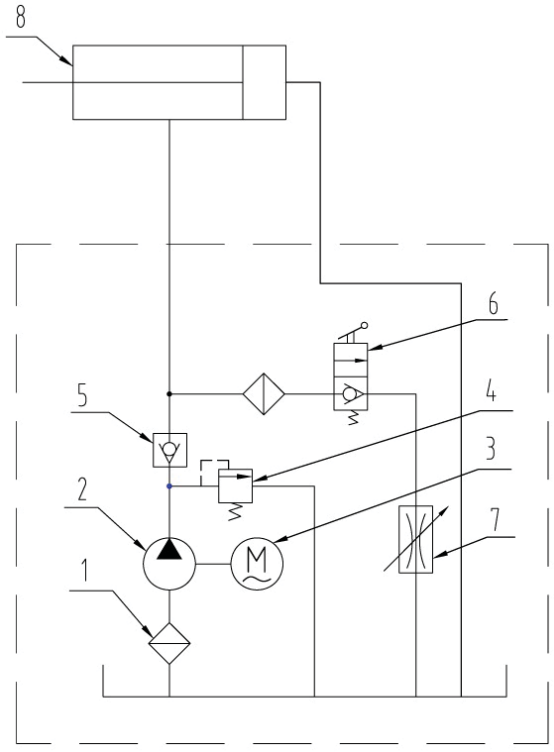

1. Filter
2. Gearpump
3. Motor
4. Relief Valve
5. Check Valve
6. Manual control Air Valve
7. Throttle Valve
8. Cylinder For Four-post lift

Fig. 43

Cylinder Bleeding Procedure

(Removing air from the hydraulic system)

PERFORM THIS PROCEDURE IMMEDIATELY AFTER INSTALLATION and BEFORE YOU PUT A VEHICLE ON THE LIFT

1. Press the UP Button to raise the runways 2 to 3 inches off of the safety locks. DO NOT RAISE THE RUNWAYS TO THE MAXIMUM HEIGHT.

2. Disengage the safety locks using the Mechanical Lock Release Handle or Air Lock Release Valve (depending on the model of 4 Post Lift you have). While activating the lock release, depress the Lowering Valve handle to lower the lift runways completely to the ground. Once the lift runways are resting on the ground maintain pressure on the lowering valve handle for several seconds more.

Air Lock Release Valve

Mechanical Lock Release Handle

Lowering Valve

Mechanical Lock & Lowering Valve Combination

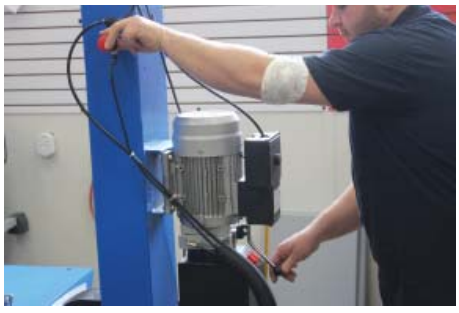

Air Lock Release Valve & Lowering Valve Combination

Resting On The Ground

3. Press the UP Button to raise your lift runways about 18 inches from the floor and repeat STEPS 1 & 2. Do this at least 2 or 3 more times. This will ensure that any air in the lifts hydraulic system is completely removed.

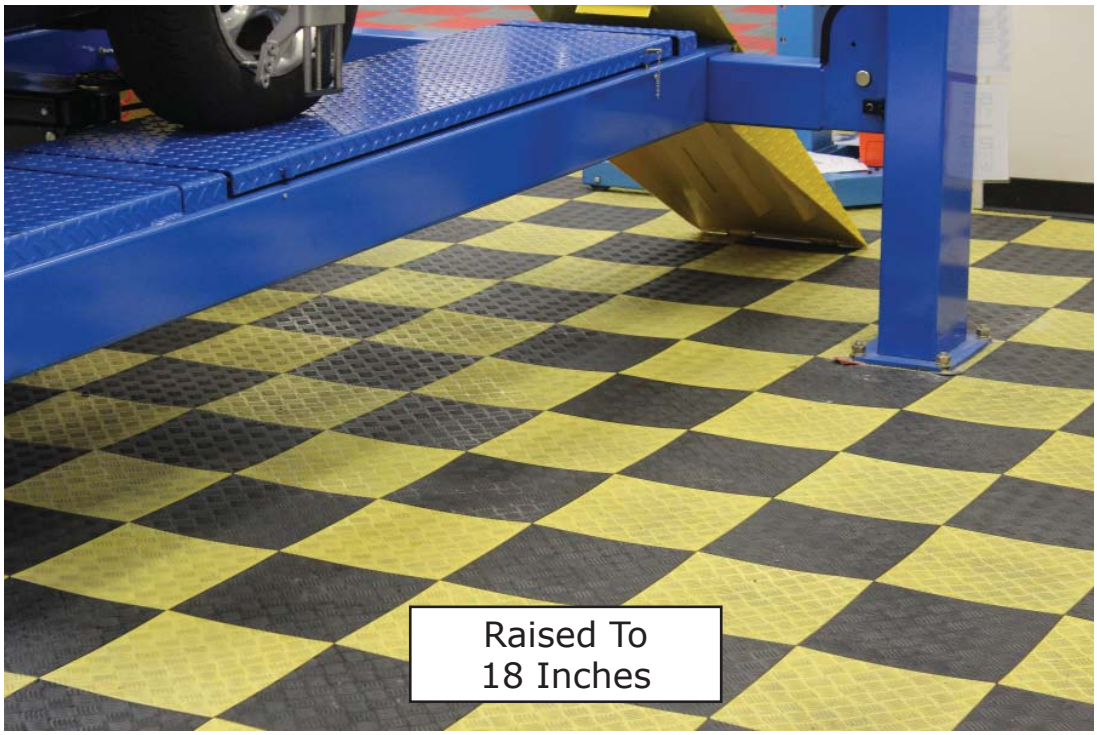

After doing this procedure the lift runways should travel up and down smoothly and at a consistent speed during operation.

Operation Instructions

To lift vehicle

1. Keep the work area clean and free of clutter.
2. Drive vehicle to the Platform and put on the brake.
3. Turn on the power and press the button **UP**, raise the lift to the working position.

Note: make sure the vehicle is steady when the lift is raised.

4. Push the handle on the release valve to rest the lift on the safety locks. Make sure the safety device is locked at the same height.

To lower vehicle

1. Be sure there are no people or objects under the lift, only leaving operator in lift area.
2. Press the button **UP until the lift has cleared the locks**, press and hold the manual-controlled air valve to release the safety device. Push the handle on the lowering valve with the other hand. The lift will lower automatically.
3. Drive away the vehicle when the lift is lowered to the lowest position.
4. Turn off the power.

Maintenance Schedule

Monthly:

1. Re-torque the anchor bolts to 850-100 Foot Pounds.
2. Lubricate cable with lubricant.
3. Check all cable connections, bolts and pins.
4. Make a visual inspection of all hydraulic hoses/lines for possible wear or leaks
5. Lubricate all Rollers, Safety devices with 90wt. gear oil or equivalent.

Note: All anchor bolts should take full torque. If any of the bolts do not tighten, DO NOT use the lift until the bolt has been replaced.

Every six months:

1. Make a visual inspection of all moving parts for possible wear, interference or damage.
2. Check and adjust as necessary, equalizer tension to insure level lifting.
3. Check columns for plumbness.

Trouble Shooting

TROUBLE	CAUSE	REMEDY
Motor does not run	1. Button does not work 2. Wiring connections are not in good condition 3. Motor burned out 4. AC contactor burned out 5. Height limit switch is damaged	1. Replace button 2. Repair all wiring connections 3. Repair or replace motor 4. Replace AC contactor 5. Replace
Motor runs but the lift is not raised	1. Motor runs in reverse rotation 2. Release valve in damage 3. Gear pump in damage 4. Relief valve or check valve in damage 5. Low oil level	1. Reverse two power wires 2. Repair or replace 3. Repair or replace 4. Repair or replace 5. Fill tank
Lift does not stay up	1. Release valve does not work 2. Relief valve or check valve leakage. 3. Cylinder or fittings leak	Repair or replace
Lift raises too slow	1. Oil line is jammed 2. Motor running on low voltage 3. Oil mixed with Air 4. Pump leaks 5. Overload lifting	1. Clean the oil line 2. Check electrical system 3. Fill tank 4. Replace Pump 5. Check load
Lift cannot lower	1. Safety device is activated 2. Release valve damaged 3. Air Cylinder damaged 4. Oil system is jammed	1. Release the safeties 2. Replace or repair 3.Replace the cylinder 4. Clean the oil system

Parts List

Item	Part No.	Description	QTY.
1	460020	Power side Platform	1
2	460021	Offside Platform	3
3	460022	Front Cross Beam	1
4	460023	Rear Cross Beam	1
5	209059A	Anchor Bolt	16
6	420028B	Safety Ladder	4
7	420175A	Hex Nut	16
8	460024	Power side Platform	1
9	460025	Pulley Shaft Weldment	2
10	420023A	Washer	12
11	420024A	Pulley	10
11A	420132A	Bronze Bush for Pulley	10
12	420021	Hex Bolt	12
13	209039	Lock Washer	2
14	420144	Washer	2
15	420030	Hex Bolt	4
16	420137	Spring Washer	4
17	420029	Washer	4
18	460026	Offside Platform	1
19	460027	Hex Bolt	4
20	420145	Oil-water Separator	1
21	420146	Straight Fitting for Air Line	1
22	209009	Cup Head Bolt	6
23	420076	90^0 Fitting for Air Line	1
24	420159	Straight Fitting For Air Line	1
25	420160	Fixing plate of Manual Control Valve	1
26	420161	Nylok Nut	2
27	420162	Manual Control Air Valve	1
28	420163	Straight Fitting For Air Line	1
29	420148	Washer	4
30	420164	Cup Head Bolt	2
31	440035	Manual Hydraulic Power Unit	1

Item	Part No.	Description	QTY.
32	209005	Nylok Nut	14
33	209004	Rubber Ring	4
34	209003	Hex Bolt	4
35	420152	Washer	6
36	206011	Cup Head Bolt	6
37	420010	Limit Switch	1
38	420010A	Fixing Plate For Limit Switch	1
39	420156	Protecting Rubber Ring	1
40	420045	Washer	16
41	420004	Pin for Drive-in Ramp	2
42	420005	Fixing Bolt	4
43	460028	Drive-in Ramp	2
44	420031	Tire Stop Plate	2
45	420136	Hex Bolt	4
46	206023A	Hex Nut	4
47	420026	Spring washer	4
48	206006	Washer	4
49	420007	Platform Lock Plate	4
50	460029	Fixing Ring For Oil Cylinder	1
51	460030	Oil Cylinder	1
52	420013	Cylinder Connecting Plate	1
53	420014	Hex Nut	1
54	420015	Split Pin	1
Parts For Cable (See Fig.21)			
55	460031	No.① Cable	1
56	460032	No.② Cable	1
57	460033	No.③ Cable	1
58	460034	No.④ Cable	1
Parts For Hydraulic System (See Fig.25)			
59	420166	90^0 Fitting	1
60	460035	Straight Fitting For Cylinder	1
61	440008	Oil Hose	1
62	460036	Extended Straight Fitting (with Nut)	1
63	460037	Oil Hose	1
64	420096	Straight Fitting For Hydraulic Power Unit	1
65	420095	Straight Fitting	1

Item	Part No.	Description	QTY.
66	440011	Needle Valve	1
67	460038	90^0 Fitting	1
Parts For Air Line System (See Fig.25, Fig.26-Fig.28)			
68	420124	T-Fitting For Air Line	2
69	420125	T-Fitting For Air Line	1
70	420126A	Straight Fitting For Air Line	1
71	440010	Black Air Line	1
72	420167	Black Air Line	1
Parts for Circuit System (See Fig.32, Fig.33)			
73	460053	Wire Cable	1
74	460054	Protecting Plastic Hose	1
75	460055	Protecting Plastic Hose	1
Parts For Cross Beam (See Fig.39 & Fig.40)			
3-1	460041	Front Cross Beam Assy.	1
3-2	460042	Pulley Safety Cover	4
3-3	209009	Cup Head Bolt	8
3-4	420044	Stop Plate	4
3-5	420138	Socket Bolt	8
3-6	420038	Pin	12
3-7	420037	Snap Ring	24
3-8	420033	Spring	4
3-9	420050	Hex Nut	8
3-10	420049	Split Pin	4
3-11	420048	Air Cylinder	4
3-12	420047	Fitting for Air Cylinder	4
3-13	420046	Split Pin	8
3-14	420042	Plastic Slider	8
3-15	209033	Washer	16
3-16	420043	Socket Bolt	16
3-17	420175	Slack-cable safety lock (left & right)	2/ea.
3-18	420171	Pin	8
3-19	420172	Pin Bush For Slack-cable Safety Lock	8
3-20	420173	Snap Ring	16
3-21	209010	Snap Ring	4
3-22	420035	Tension Pulley	4
3-23	420174	Spacer	4

Item	Part No.	Description	QTY.
3-24	420041A	Pulley Pin	4
3-25	420040A	Pulley Bush	4
Parts For Cylinder (See Fig.41)			
51-1	460043	Dust Ring	1
51-2	460044	Y Ring	1
51-3	460045	Head Cap	1
51-4	460046	O Ring	1
51-5	460047	Bore Weldment	1
51-6	460048	Piston Rod	1
51-7	460049	Pin	1
51-8	460050	Support Ring	1
51-9	460051	Y Ring	1
51-10	460052	Piston	1
Parts For Atlas Power Unit (See Fig.42)			
31-1	440014	Motor	1
31-2	440039	Capacitor	2
31-3	440040	AC Contactor	1
31-4	440015	Motor Connecting Shaft	1
31-5	440041	Valve Body	1
31-6	440017	Relief Valve	1
31-7	440019	Spring Washer	4
31-8	440020	Socket Bolt	4
31-9	440021	Inlet Pipe	1
31-10	440022	O-ring	1
31-11	440023	Filter	1
31-12	440024	Hex Bolt	4
31-13	440025	Reservoir	1
31-14	440042	Cover of Motor Terminal Box	1
31-15	440043	Control Switch	1
31-16	440044	Screw	6
31-17	440026	Oil Return Port	1
31-18	440027	Oil Outlet	1
31-19	440045	Release Valve	1
31-20	440046	Handle For Release Valve	1
31-21	440047	Washer	1
31-22	440048	Hex Nut	1

Item	Part No.	Description	QTY.
31-23	440028	Check Valve	1
31-24	440030	Gear Pump	1
31-25	440031	Oil Return Pipe	1
31-26	440032	Filter Cap	1

Warranty

This item is warranted for five (5) years on structural components, two (2) years on hydraulic cylinders, and one (1) year on electric or air / hydraulic power units from invoice date. Wear items are covered by a 90 day warranty.

This LIMITED warranty policy does **not include a labor** warranty.

NOTE: ALL WARRANTY CLAIMS MUST BE PRE-APPROVED BY THE MANUFACTURER TO BE VALID.

The Manufacturer shall repair or replace at their option for this period those parts returned to the factory freight prepaid, which prove after inspection to be defective. This warranty will not apply unless the product is installed, used and maintained in accordance with the Manufacturers installation, operation and maintenance instructions.

This warranty applies to the ORIGINAL purchaser only, and is non-transferable. The warranty covers the products to be free of defects in material and workmanship but, does not cover normal maintenance or adjustments, damage or malfunction caused by: improper handling, installation, abuse, misuse, negligence, carelessness of operation or normal wear and tear. In addition, this warranty does not cover equipment when repairs or alterations have been made or attempted to the Manufacturer's products.

THIS WARRANTY IS EXCLUSIVE AND IS LIEU OF ALL OTHER WARRANTIES EXPRESSED OR IMPLIED INCLUDING ANY IMPLIED WARRANTY OR MERCHANTABILITY OR ANY IMPLIED WARRANTY OF FITNESS FROM A PARTICULAR PURPOSE, AND ALL SUCH IMPLIED WARRANTIES ARE EXPRESSLY EXCLUDED.

THE REMEDIES DESCRIBED ARE EXCLUSIVE AND IN NO EVENT SHALL THE MANUFACTURER, NOR ANY SALES AGENT OR OTHER COMPANY AFFILIATED WITH IT OR THEM, BE LIABLE FOR SPECIAL CONSEQUENTIAL OR INCIDENTAL DAMAGES FOR THE BREACH OF OR DELAY IN PERFORMANCE OF THIS WARRANTY. THIS INCLUDES, BUT IS NOT LIMITED TO, LOSS OF PROFIT, RENTAL OR SUBSTITUTE EQUIPMENT OR OTHER COMMERCIAL LOSS.

PRICES: Prices and specifications are subject to change without notice. All orders will be invoiced at prices prevailing at time of shipment. Prices do not include any local, state or federal taxes.

RETURNS: Products may not be returned without prior written approval from the Manufacturer.

DUE TO THE COMPETITIVENESS OF THE SELLING PRICE OF THESE LIFTS, THIS WARRANTY POLICY WILL BE STRICTLY ADMINISTERED AND ADHERED TO.