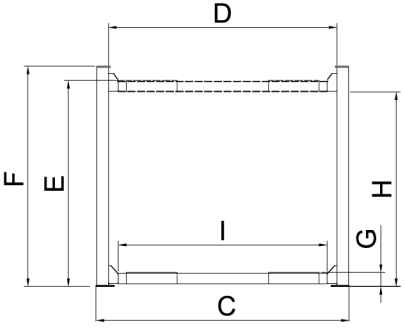
D
F
E
H
I
G
C

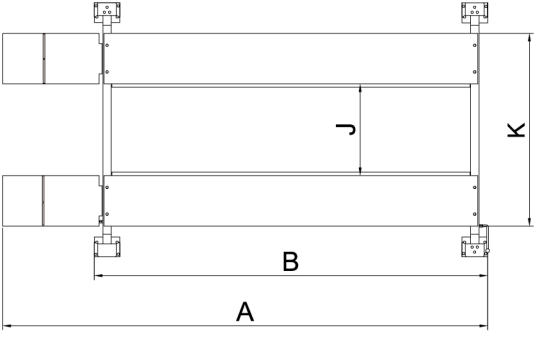
J
K
B
A