Scissor Lift X-80

READ THIS ENTIRE MANUAL BEFORE INSTALLATION & OPERATION BEGINS.

Product/Item Code	**Four** post lift
Brand	
Model	
Colour	
Votage	
PO No.	
	MADE IN CHINA

This information is required when calling for parts or warranty issues.

PRODUCT WARRANTY

Our comprehensive product warranty means more than a commitment to you; it's also a commitment to the value of your new KATOOL lift. For full warranty details and to register your new lift contact your nearest KATOOL dealer or visit:

www.katoolautoequip.com

We offer a limited one-year (12 months) warranty on all parts and against all product defects, free of charge to our customers, **on all equipment**.

* Including but not limited to: Cylinders, power units, motors, displays, electronics, etc. Vehicle lifts will include an additional three-year (36 months) warranty on all lift **structural components only.**

Warranty claim for all products must fall within above period in order to qualify for limited warranty.

Warranty is non-transferable, must have original order number, and purchased from our company or a registered vendor. Replacement Parts will be provided at no cost to the customer and will include free shipping.

All warranty claims submitted to KATOOL are subject to approval by the warranty vice department and may be approved or denied at the full discretion of these departments. Photos and/or videos of original defects may be requested. Customers should not disassemble any piece of equipment before proof of original problem/issue has been determined.

What is NOT covered under this warranty:

a. Any failure that results from Purchaser's abuse, neglect or failure to operate, maintain or service product in accordance with instructions provided in the owner's manual(s) supplied.

b. Any damage caused by overloading lift beyond rated capacity.

c. Items or service normally required to maintain the product, i.e. lubricants, oil, etc.

d. Items considered general wear parts such as rubber pads, lifting cables, etc. unless wear or failure is a direct result of manufacturer defect due to material and/or workmanship.

e. Any component damaged in shipment or any failure caused by installing or operating lift under conditions not in accordance with installation and operation guidelines or damaged by contact with tools or surroundings.

f. Motor or pump failure caused by rain, excessive humidity, corrosive environments or other contaminants
g. Rusted components due to improper maintenance or corrosive environments.

h. Cosmetic defects that do not interfere with product functionality.

i. Damage due to incorrect voltage or improper wiring.

j. Any incidental, indirect, or consequential loss, damage or expense that may result from any defect, failure or malfunction of KATOOL Inc. product.

k. Any equipment outside of the policy will not be covered and buyer will be responsible for purchasing replacement parts at full cost and shipping charges will apply.

l. Labor is not included in warranty.

INSTALLER / OPERATOR PLEASE READ AND FULLY UNDERSTAND.

BY PROCEEDING YOU AGREE TO THE FOLLOWING:

- **I have visually inspected the site where the lift is to be installed and verified the concrete to be in good condition and free of cracks or other defects.**
- **I Understand that installing a lift on cracked or defective concrete could cause lift failure resulting in personal injury or death.**
- **I understand that a level floor is required for proper installation and level lifting.**
- **I understand that I am responsible if my floor is of questionable slope and that I will be responsible for all charges related to pouring a new level concrete slab if required and any charges.**
- **I assume full responsibility for the concrete floor and condition thereof, now or later, where the above equipment model(s) are to be installed.**
- **Failure to follow danger, warning, and caution instructions may lead to serious personal injury or death to operator or bystander or damage to property.**
- **I understand that KATOOL lifts are designed to be installed in indoor locations only. Failure to follow installation instructions may lead to serious personal injury or death to operator or bystander or damage to property or lift.**

DANGER

Failure to follow danger, warning, and caution instructions may lead to serious personal injury or death to operator or bystander or damage to property.

WARNING

Please read entire manual prior to installation. Do not operate this machine until you read and understand all the dangers, warnings and cautions in this manual.

INSTALLER / OPERATOR PROTECTIVE EQUIPMENT

Personal protective equipment helps makes installation and operation safer; however, it does not take the place of safe operating practices. Always wear durable work clothing during any installation and/or service activity. Shop aprons or shop coats may also be worn, however loose-fitting clothing should be avoided. Tight fitting leather gloves are recommended to protect technician hands when handling parts. Sturdy leather work shoes with steel toes and oil-resistant soles should be used by all service personnel to help prevent injury during typical installation and operation activities.

Eye protection is essential during installation and operation activities. Safety glasses with side shields, goggles, or face shields are acceptable. Everyday eyeglasses only have impact resistant lenses; they are not safety glasses.

Back belts provide support during lifting activities and are also helpful in providing worker protection. Consideration should also be given to the use of hearing protection if service activity is performed in an enclosed area, or if noise levels are high.

IMPORTANT SAFETY INSTRUCTIONS

Read these safety instructions entirely.

IMPORTANT NOTICE

Do not attempt to install this lift if you have never been trained on basic automotive lift installation procedures.
Never attempt to lift components without proper lifting tools such as forklift or cranes.
Stay clear of any moving parts that can fall and cause injury.

Read and understand all instructions and all safety warnings before operating lift.

The equipment can only be operated by qualified personnel trained to use this equipment. Misuse of the machine for other purpose or modifying any components of the equipment without receiving the permission from the manufacturer may result in direct or indirect damage to the equipment.

Due to the many variations in procedures, techniques, tools, and parts for auto repairs as well as the skill and training of the individual performing the work, the manufacturer cannot anticipate any or all warnings necessary for the safe operation of the equipment. It is the technician's responsibility to be knowledgeable in the safe and acceptable means of auto repair of vehicles being serviced. Never endanger your safety, the safety of others in the work area or the equipment or vehicle being serviced.

1. Eye and face protection recommendations:
   Protective eye and face equipment is required while using this equipment due to potential of injury." O.S.H.A. 1910.133(a)
   Protective goggles, safety glasses, or a face shield must be provided by the owner and worn by the operator of the equipment. Care should be taken to see that all eye and face safety precautions are followed by the operator. ALWAYS WEAR SAFETY GLASSES. Everyday glasses only have impact resistant lenses; they are not safety glasses.
2. Read and understand this manual before operating. Abuse and misuse will shorten the functional life.
3. NEVER remove safety related components from the lift. Do not use lift if safety related components are missing or damaged.
4. STAY ALERT. Use common sense and watch what you are doing. Remember, SAFETY FIRST.
5. Only trained operators should operate this lift. All non-trained personnel should be kept away from the work area. Never let non-trained personnel come in contact with, or operate lift.
6. DO NOT override self-closing lift controls.
7. ALWAYS make sure the safeties are engaged before attempting to work on or near a vehicle.
8. WARNING! RISK OF EXPLOSION. This

equipment has internal arcing or sparking parts which should not be exposed to flammable vapors. This machine should not be located in a recessed area or below floor level.

9. Check for damaged parts. Check for alignment of moving parts, breakage of parts or any condition that may affect operation of the equipment. Do not use the equipment if any component is broken or damaged.
10. Clear the area if vehicle is in danger of falling.
11. KATOOL requires all operators to read and be familiar with ANSI/ALI ALIS Safety Requirements for Installation and Service of Automotive Lifts.
12. Guard against electric shock. This equipment must be grounded while in use to protect operator from electric shock. Never connect the green power cord wire to a live terminal. This is for ground only.
13. DANGER! To reduce the risk of electric shock, do not use on wet surfaces or expose to rain. The Power Unit used on this equipment contains high voltage. Disconnect power at the receptacle or at the circuit.

14. Care must be taken as burns can occur from touching hot parts.
15. Do not operate equipment with a damaged cord or if the equipment has been dropped or damaged until it has been examined and repaired by a qualified serviceman.
16. Do not let cord hang over edge of table, bench, or counter or come in contact with hot manifolds or moving fan blades.
17. If an extension cord is necessary, a cord with a current rating equal to or more than that of the equipment should be used. Cords rated for less current than the equipment may overheat. Care should be taken to arrange the cord so that it will not be tripped over or pulled.
18. Always unplug equipment from electrical outlet when not in use. Never use the cord to pull the plug from the outlet. Grasp plug and pull to disconnect.
19. Let equipment cool down completely before putting away. Loop cord loosely around equipment when storing.
20. Keep guards and safety features in place and in working order.
21. Wear proper clothing. Safety toe, non-slip footwear and protective hair covering to contain hair is recommended. Do not wear jewelry, loose clothing, neckties, or gloves when operating the balancer.
22. Keep work area clean and well lighted. Cluttered and/or dark areas invite accidents.
23. Avoid dangerous environments. Do not use power tools or electrical equipment in a damp or wet environment, or expose them to rain.
24. Use only manufacturer's recommended accessories. Improper accessories may result in personal injury or property damage.

25. Repair or replace any part that is damaged or worn and that may cause unsafe balancer operation.
26. Do not operate damaged equipment until it has been examined and repaired by a qualified service technician.
27. To reduce the risk of fire, do not operate equipment in the vicinity of open containers or flammable liquids (gasoline).
28. Switch off the breaker switch before performing any electrical repairs. Secure plug so that it cannot be accidentally plugged-in during service. or mark circuit breaker switch so that it cannot be accidentally switched-on during service.
29. Adequate ventilation should be provided when working on or operating internal combustion engines.
30. Keep hair, loose clothing, fingers, and all parts of body away from moving parts.
31. Use equipment only as described in this manual.
32. Use only manufacturer's recommended attachments and accessories.
33. The equipment should be installed on the stable surface and not on a wooden pallet.
34. Do not install the equipment in a place with high temperature or moisture, near the heating system, water tap, air-humidifier or chimney.
35. Avoid contact with lots of dust, ammonia, alcohol, thinner or spraying binder.
36. People who are not operating the machines should be kept away during normal operation.
37. Pay special attention to the warning labels on the machine.
38. Do not touch or approach the moving parts by hand during operation.
39. Do not remove the safety device or prevent it from working properly.

SAVE AND FOLLOW THE ABOVE INSTRUCTIONS

Operator Protective Equipment:

Personal protective equipment helps make tire servicing safer. However, equipment does not take the place of safe operating practices. Always wear durable work clothing during tire service activity. Loose fitting clothing should be avoided. Tight fitting leather gloves are recommended to protect operator's hands when handling worn tires and wheels. Sturdy leather work shoes with steel toes and oil-resistant soles should be used by tire service personnel to help prevent injury in typical shop activities. Eye protection is essential during tire service activity. Safety glasses with side shields, goggles, or face shields are acceptable. Back belts provide support during lifting activities and are also helpful in providing operator protection. Consideration should also be given to the use of hearing protection if tire service activity is performed in an enclosed area, or if noise levels are high.

Definitions of Hazard Levels

Identify the hazard levels used in this manual with the following definitions and signal words:

DANGER

Watch for this symbol:

It Means: Immediate hazards, which will result in severe personal injury or death.

WARNING

Watch for this symbol:

It Means: Hazards or unsafe practices, which could result in severe personal injury or death.

CAUTION

Watch for this symbol:

It Means: Hazards or unsafe practices, which may result in minor personal injury or product or property damage.

BE ALERT

Watch for this symbol! It means BE ALERT! Your safety, or the safety of others, is involved!

Safety Notices and Decals

Failure to follow danger, warning, and caution instructions may lead to serious personal injury or death to operator or bystander or damage to property. Do not operate this machine until you read and understand all the dangers, warnings and cautions in this manual. For additional copies of either, or further information, contact:

Standard Safety Devices

Keep hair, loose clothing, fingers and all parts of body away from moving parts.

• Press STOP key for stopping the wheel under emergency conditions.

⚠ WARNING

RISK OF EXPLOSION

This equipment has internal arcing or sparking parts which should not be exposed to flammable vapors. Do not locate in a recessed area or below floor level.

THIS EQUIPMENT MUST BE EARTH-GROUNDED

The earth-ground connector built into the power cord provides protection to reduce the risk of electrical shock.

⚠ AVERTISSEMENT

RISQUE D'EXPLOSION

Cet équipement possède des pièces internes, pouvant lancer des arcs ou jeter des étincelles, et qui ne devraient pas être exposées à des vapeurs inflammables. Ne situez pas l'équipement dans des endroits encastrés ou en-dessous du niveau du plancher.

CET ÉQUIPEMENT DOIT ÊTRE MIS À LA TERRE

Le raccord de mise à la terre incorporé dans le cordon de puissance fournit une protection afin de réduire le risque d'électrocution.

⚠ CAUTION

Do not use below garage floor or grade level.

Disconnect power before servicing this equipment.

To prevent electrical shock, do not remove cover. No user servicable parts inside. Refer servicing to qualified service personnel.

⚠ ATTENTION

N'utilisez pas en-dessous du plancher du garage ou du palier.

Débranchez le cordon de puissance avant de faire l'entretien de cet équipement.

Afin de vous protéger contre l'électrocution, n'enlevez pas le couvercle. Aucune pièce interne ne nécessite d'entretien par l'utilisateur. Référez l'entretien à un personnel de service qualifié.

8113927 05

Sales & Support: (888) 636-1918; Email: info@autokato.com Released 1/13/2026

INTRODUCTION

Congratulations on the purchase of the KATOOL Equipment. This vehicle lift is designed for ease of operation, safe handling of vehicles. This equipment will provide many years of trouble-free operation requiring minimum maintenance and care. Please read this manual thoroughly before operating the unit. Instructions on use, maintenance and operational of the lift are covered in this manual.

1. Carefully remove the crating and packing materials. CAUTION! Use care when cutting steel banding material as items may become loose and fall, causing injury.

2. Check the voltage, phase, and proper amperage requirements for the motor shown on the motor plate. Wiring MUST be performed by a certified electrician only.

Owner's Responsibility

To maintain the lift and user safety, the responsibility of the owner is to read and follow these instructions:

Follow all installation and operation instructions.

- Make sure installation conforms to all applicable Local, State, and Federal Codes, Rules, and Regulations; such as State and Federal OSHA Regulations and Electrical Codes.
- Carefully check the lift for correct initial function.
- Read and follow the safety instructions. Keep them readily available for machine operators.
- Make certain all operators are properly trained, know how to safely and correctly operate the unit, and are
- properly supervised.
- Allow unit operation only with all parts in place and operating safely.
- Carefully inspect the unit on a regular basis and perform all maintenance as required.
- Service and maintain the unit only with authorized or approved replacement parts.
- Keep all instructions permanently with the unit and all decals on the unit clean and visible.

Receiving:

The shipment should be thoroughly inspected as soon as it is received. The signed bill of lading is acknowledgement by the carrier of receipt in good condition of shipment covered by your invoice. If any of the goods called for on this bill of lading are shorted or damaged, do not accept them until the carrier makes a notation on the freight bill of the shorted or damaged goods. Do this for your own protection.

NOTIFY THE CARRIER AT ONCE if any hidden loss or damage is discovered after receipt and request the carrier to make an inspection. If the carrier will not do so, prepare a signed statement to the effect that you have notified the carrier (on a specific date) and that the carrier has failed to comply with your request.
IT IS DIFFICULT TO COLLECT FOR LOSS OR DAMAGE AFTER YOU HAVE GIVEN THE CARRIER A CLEAR RECEIPT. File your claim with the carrier promptly. Support your claim with copies of the bill of lading, freight bill,

invoice, and photographs, if available. Our willingness to assist in helping you process your claim does not make KATOOL responsible for collection of claims or replacement of lost or damaged materials.

⚠ Any other use is to be considered incorrect and unreasonable. The manufacture will not be responsibility for any damage caused from misuse of this Tire Changer. Any use other than that specified in this manual is inappropriate, incorrect, and unreasonable.

KEEP THIS MANUAL NEAR THE MACHINE FOR FUTURE REFERENCE

Table of Contents

PRODUCT WARRANTY	2
Installer / Operator Instructions	4
Operator Protective Equipment	4
Important Safety Instructions	5
Definitions of Hazard Levels	8
Introduction	10
Table of content	12
1.0 Product Specifications:	13
1.1 Parts Inventory & Description:	15
1.2 Key Machine Components	16
1.2.1 Model Description	18
1.2.2 Purpose	18
1.2.3 Functions and Features	18
1.2.4 Technical Specifications	19
1.2.5 Basic parameters of the equipment	19
1.2.6 Environmental Requirements	19
2.0 Lift Structure	20
2.0.1 Main Structural Principles	21
3.0 Operation Description	22
3.0.1 Precautions for vehicle repair work	22
3.0.2 Preparation before operation	22
3.0.3 Inspection before operation	22
4.0 Lifting and Lowering the Vehicle:	23
4.0.1 Lifting the Vehicle	25
4.0.2 Lowering the Vehicle	26
5.0 Hydraulic and Electrical System of the Equipment	27
5.0.1 Hydraulic System of the Lift:	27
5.0.2 The working principle of the hydraulic system	28
5.0.3 Electrical System of the Lift	29
5.0.4 The electrical working principle is as follows	30
6.0 Frequently Asked Questions (FAQ):	31
7.0 Repair and Maintenance	32
8.0 Maintenance of Hydraulic System	34
9.0 Storage and Scrap	34
10.0 Lift Set Up Instructions	35
10.0.1 Mechanical Installation	36
10.0.2 Electrical Installation	43
10.0.3 Lift Lubrication	45
10.0.4 Bleeding the scissor lift	46
11.0 Safety Instructions	47
12.0 Exploded Assembly View and Bill of Material	48
13.0 Sales and Tech Support Contact info	50

Failure to follow the instructions and safety precautions in this manual can result in serious injury or death.
Make sure all other operators also read this manual. Keep the manual near the product for future reference.
By proceeding with setup and operation, you agree that you fully understand the proper use of this product and assume full responsibility of product use.

1.0 Product Specifications

X-80 - Mid Rise Scissor Lift Electric 110V or 220V, 47'' Release Auto Lift Car Lift 7716 lbs. Capacity

- 7716 lbs. (3500KG) lifting capacity
- CE Approved and Certified. 115% dynamic loading capacity standard and tested at 150% static loading capacity.
- Mobile or fixed mount design.
- Starting-up system design.
- Electronic safety release.
- 24V safe control system.
- Max height limit switch.
- Composite rubber lifting blocks included
- Comes with self-lubricated bushings and bearings.
- Drive up ramps lock to provide additional extension of the platform for long vehicles.
- Portable, mobile kit included for easy maneuvering of the lift in your garage.
- Top level hydraulic system and aluminum motor with fan on top to avoid overheating caused by long time working with 110 or 220V/ 60HZ/ 1PH

Figure 1

Lifting Capacity	7716 LBS (3500kg)
Max. Lifting Height	41” (1050 mm)
Lowered Height	4.25” (110 mm)
Lifting Time	35s
Width Overall	73.23” (1860 mm)
Platform Width	19.69” (500 mm)
Platform Length	56.3"/1430mm ~80.16"/2036mm
Width between Platforms	33.86” (860 mm)
Air Supply	85-120 psi (6-8bar)
Motor	110 V/220 VAC/60HZ/1PH
Product Dimensions	83.5 x 76.77 x 41.33 in (2120 x 1950 x 1050 mm)
Shipping Weight	Scissor lift/Pump - 1323 lbs. (600 kg)

1.1 Parts Inventory & Description

Be sure to take a complete inventory of parts prior to beginning installation.

Description	QTY
Scissor Lift Assembly	1
Pump Control Panel	1
Ramp Extensions	4
Lifting Pads 1”	4
Lifting Pads 2”	4
Lever	1
Front Caster	1
Rear Casters	2

Figure 2

1.2 Key Machine Components:

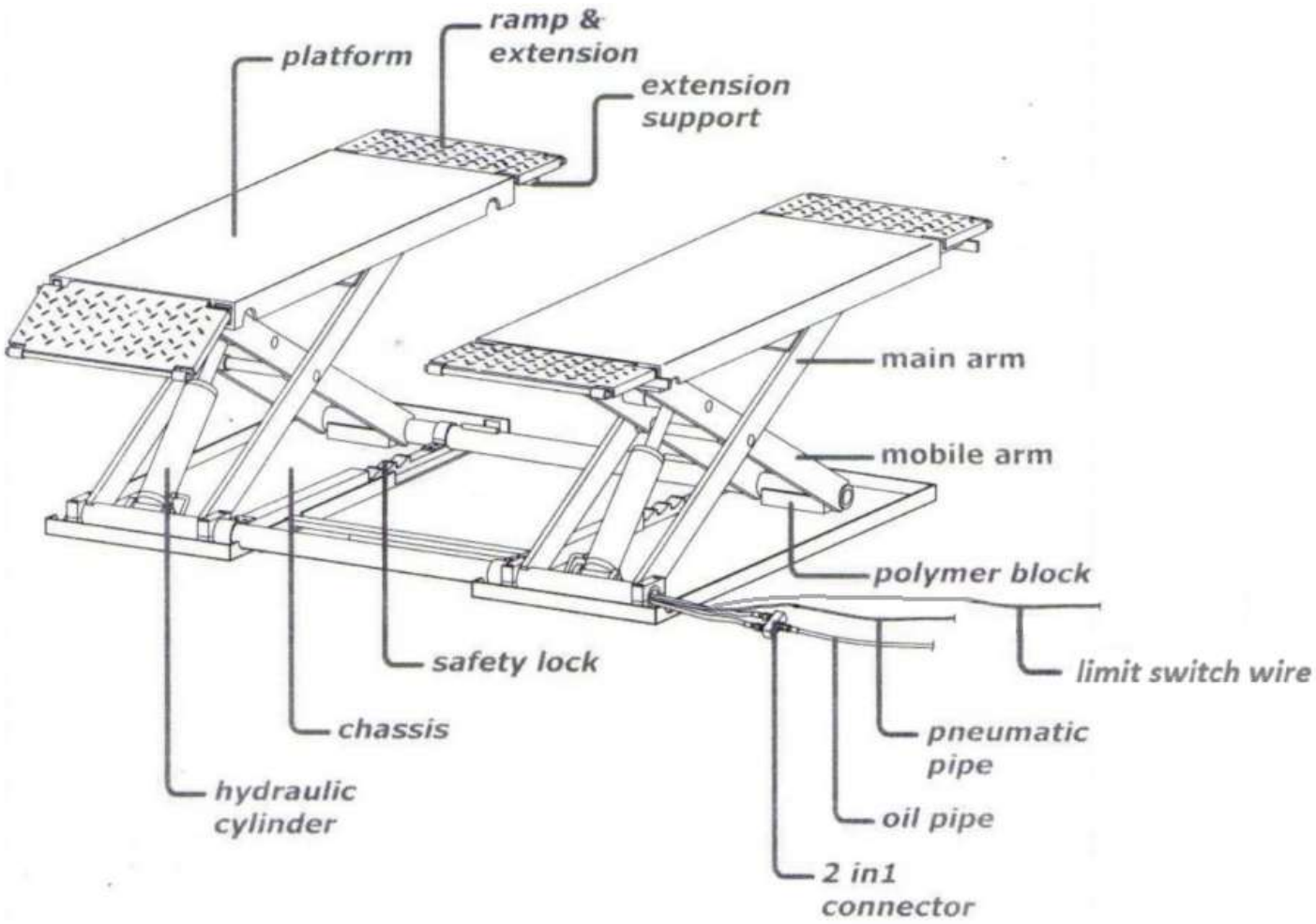

X-80 (Pneumatic)

Figure 3a

Pump

Wheels

Lever

X-80

Figure 3b

1.2.1 Model Description:

Model	Description
X-80 - Mid Rise Scissor Lift	Dual Platform Vehicle Lift 7716 lbs. (Fig.1)

1.2.2 Purpose

This machine is designed to lift large or heavy-duty vehicles with total weight 8000lbs in garage and workshop.

1.2.3 Functions and Features

- Platforms are equipped with ramp extensions which can be locked as the platform extensions.
- Platforms are linked to the base frame by means of a scissor lift system.
- The lifting system of each platform is composed of main arm, a mobile arm and hydraulic cylinders for each platform.
- Motion is transmitted by the hydraulic cylinder to the mobile arm.
- Lowering and lifting are carried out by operation of the pump control panel.
- The mechanical safety locks operated by pneumatic cylinders are installed at each base and controlled by the control panel.
- The lift is equipped with a bolster beam in front to keep the two platforms level during lifting and lowering.
- Wheels can be installed on the lift to move it around.

⚠ WARNING

Note: It is extremely forbidden to load the vehicle when the mobile wheels are on the lift. Failure to do so can damage the lift severely.

⚠ CAUTION

IT IS IMPERATIVE THAT THE LOCK BARS BE COMPLETELY DISENGAGED WHEN THE VEHICLE IS BEING LOWERED TO THE GROUND. FAILURE TO FULLY DISENGAGE BOTH LOCK BARS DURING THE LOWERING PROCESS WILL CAUSE FRAME DAMAGE TO THE LIFT.

1.2.4 Technical Specifications

Noise: Working noise: ≤75dB(A)
Power unit: Electrical parameters of the machine: Motor (optional)
Voltage: According to client's requirement
Single phase: 110 V/220,60 Hz,1 Ph,3.0 Hp(2.2KW)
Amperage Requirement: 30 Amp

1.2.5 Basic parameters of the equipment:

Model	Rated Load (lbs.)	Lifting Height (in/mm)	Raising Time (sec)	Decent Time (sec)	Net Weight (lbs./kg)	Width between Platforms (in/mm)	Machine Width (in/mm)	Machine length, platform extended (in/mm)
X-80	7716 lbs. (3500 kg)	41.34" (1050 mm)	≤35s	≥45s	1323 lbs. (600 KG)	33.85" (860 mm)	73.23" (1860 mm)	80.16" (2036mm)

1.2.6 Environmental Requirements:

Working temperature: -50°C ~ 40°C
Relative humidity: 80% @ 30°C
Transport/storage temperature: -5°C ~ +400°C
Height above sea level: 2000m max

2.0 Lift Structure

Lift structures are shown as below:

Model	Description
X-80 - Mid Rise Scissor Lift	Dual Platform Vehicle Lift 7716 lbs. (Fig.1)

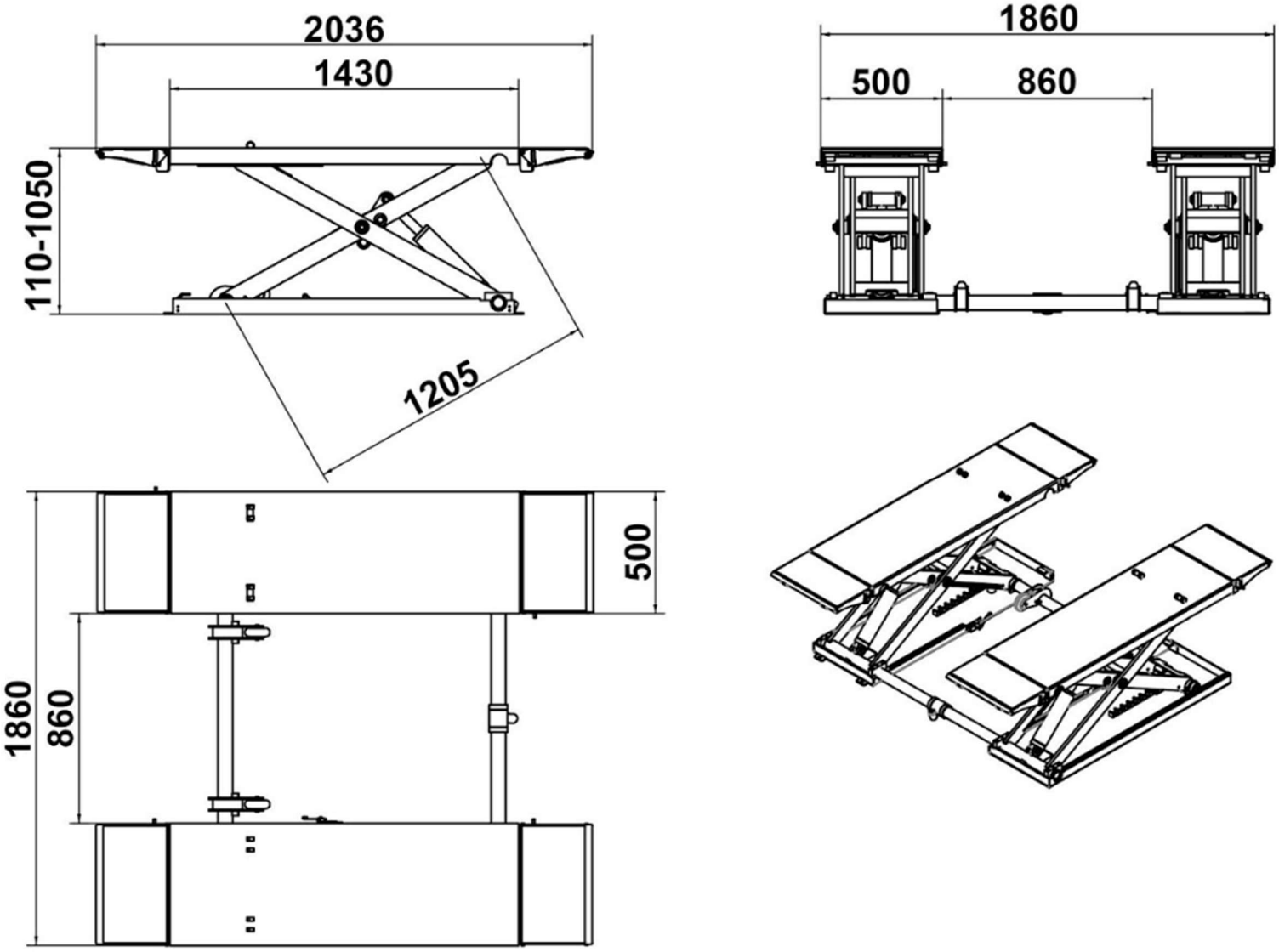

Figure 4

2.0.1 Main Structural Principles:

Lifting mechanism:

When the UP button is depressed on the control panel the hydraulic fluid is pumped into the two lift cylinders. The lift cylinders push the mobile arm up which results in raising the platform up. Once the vehicle is lifted to the right height, the lock button is pressed to engage the nearest mechanical safeties preventing the lift from collapsing.

Balance mechanism: The lift is balanced by maintaining equal hydraulic pressure in both cylinders.

Safety locking system: There lift is equipped with mechanical safety positions which prevents the vehicle from lowering inadvertently when the lock system is engaged.

3.0 Operation Description

3.0.1 Precautions for vehicle repair work

- Carefully read all warning labels.
- The hydraulic valves have been factory calibrated, and the user can't make self-adjustment, otherwise the user will be responsible all consequences.
- Some specifications in the instruction manual are subjected to change without notice depending on production needs.

3.0.2 Preparation before operation

- Lubricate contact surface of the platform with general-purpose lithium grease (GB7324-87).
- All sliding surface should be coated evenly.
- Check the oil level. Fill hydraulic oil N32 or N46 to the oil reservoir of the power unit if the oil level is low.

3.0.3 Inspection before operation

- Check to see if the motor power is installed properly.
- Check to see if all the connection bolts are fastened.

⚠ WARNING

Note: Don't operate the lift with damaged cables or damaged and missing parts. The lift should only be operated after it is repaired and inspected by a qualified professional repair technician.

During all operations, keep hands and other parts of the body as far as possible from moving parts of the machine. Necklace, bracelets and loose-fitting clothes can get caught in the lift mechanism.

4.0 Lifting and Lowering the Vehicle:

Importance of Choosing a Lift with Adequate Capacity

Selecting a lift with a capacity that exceeds the vehicle's weight requirements is advisable. This accounts for variables like vehicle modifications, additional equipment, or unexpected weight distributions. Many manufacturers recommend not exceeding 75% of a lift's rated capacity to maintain safety margins.

Safe Operating Practices

- Adhere to Weight Limits: Never exceed the lift's total capacity.
- Proper Vehicle Positioning: Ensure that the vehicle is completely stopped at the platform baffles.
- Regular Maintenance: Follow the manufacturer's maintenance schedule and conduct routine inspections to identify potential issues.

By understanding and respecting the weight capacities and operational guidelines of four-post lifts, automotive shops can ensure safer working conditions and prolonged lifespan of their equipment.

Controls for operating the lift are:

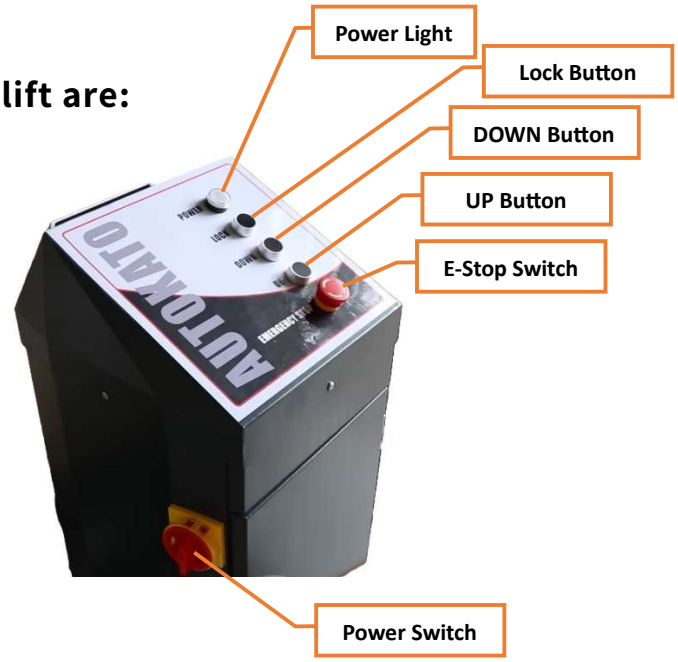

POWER SWITCH

The switch can be set in two positions:
OFF: the lift electric circuit is not powered; the switch can be padlocked to prevent the use of the lift.
ON: the main electric circuit is powered

POWER

It shows that the electric circuit is powered

UP

When pressed, the electric circuit for the lift operates the motor and hydraulic circuit to raise the lift

DOWN

When pressed, the lift will be raised a little bit to release the safety, and a few seconds later the lift begins to descend under its weight and the load lifted

LOCK

When pressed, the lowering solenoid valve operates the hydraulic circuit to lower the lift to engage the nearest mechanical safeties.

4.0.1 Lifting the Vehicle

- Keep work area clean, especially under the platforms(runways).
- Do not operate the lift in cluttered work area.
- Turn the power switch clockwise to turn on the lift.
- Lower the platform to the lowest position by pressing the DOWN button.
- The lift will stop as soon as the platform is at its lowest position.
- Drive the vehicle onto the ramps and then over the lift's platforms, using a spotter or mirror to center it so that its weight is balanced.
- Make sure to park the vehicle evenly over the platform.
- Place the lifting pads on the platform under the vehicle.
- Press the UP button on the electric control panel to slowly lift the vehicle to the required height.
- Lift will stop once the UP button is released or upward travel limit is reached.

- **WARNING** Press the lock button is to engage the nearest mechanical safeties preventing the lift from collapsing.
- Do not allow unauthorized persons to stay under the raised vehicle.
- Avoid rocking of vehicle.
- Keep the lift free of tools, parts, etc.

CAUTION

Note:

- ***Do not load the vehicle on the lift when the mobile wheels are installed on the lift.***
- ***Before operation, the safety locking devices must be Inspected.***
  - ***Inspect the platforms for any deformation.***
- ***Before lifting the vehicle, check all the hydraulic hose and fittings for oil leakage. In case of leakage, please don't use the lift. Remove the fitting with leakage. Re-install the fitting with new sealant and check if oil leakage still exists. Replace with a new fitting if the oil leak does not stop.***

- ***After the vehicle is lifted, when adding or removing any major heavy object, use a secondary lift mechanism to maintain the balance of the vehicle.***

⚠ WARNING

- ***Always engage the safety lock before going under the vehicle.***
- ***Incase of a hydraulic failure the safety lock feature will automatically engage to prevent the lift from collapsing.***
- ***Never allow anyone to go under the lift when raising or lowering the vehicle. Read the safety procedures in the manual.***
- ***During raising and lowering cycles: Closely watch the vehicle and the lift, do not allow anyone to stay in the lift area and make sure the vehicle doors are closed.***

4.0.2 Lowering the Vehicle

- Clean the work area before lowering the vehicle.
- Stay clear of the vehicle before lowing the vehicle.
- First press the LOCK button to disengage the safety lock.
- Push DOWN button to lower the vehicle.
- Lower the vehicle till the platform reaches its lowest position.

⚠ CAUTION

Note:

- ***In case of loss of function, you must switch off the power.***

5.0 Hydraulic and Electrical System of the Equipment:

5.0.1 Hydraulic System of the Lift

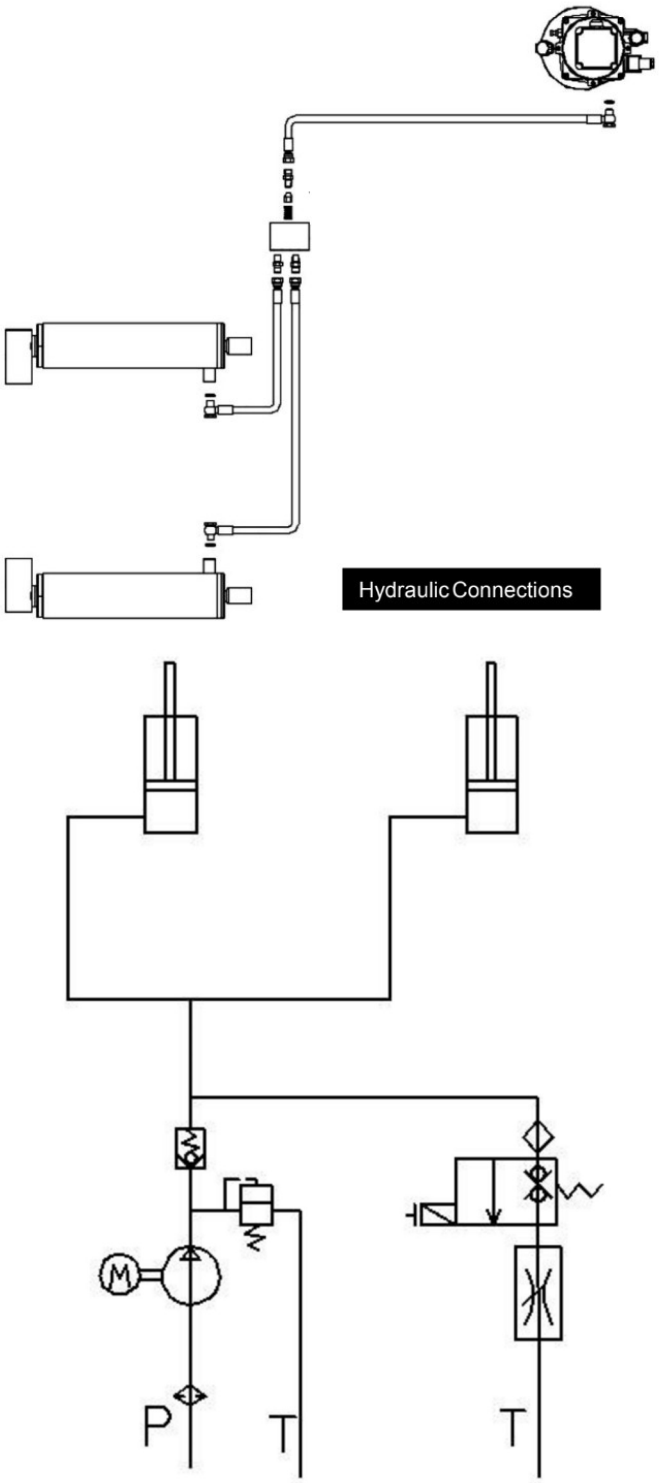

Figure 5

5.0.2 The working principle of the hydraulic system is as follows:

- As shown in above figure 5, when the UP button is pressed, the pump motor is started, driving the oil pump, sucking the hydraulic oil from the oil tank into the two Master cylinders, forcing the piston rod to move. At this time, the safety valve is closed.
- (The safety valve controls the pressure in the system for the rated load, but when the pressure in the system exceeds the limit, the safety valve will overflow automatically to protect the hydraulic system).
- Release the start UP button to stop the oil supply and the lifting will stop. For lowering; push DOWN button to start the pump motor to raise vehicle a little, turn the safety release handle clockwise to release the safety lock mechanism, then press the lowering handle simultaneously while holding the safety release handle rotated clockwise. The valve is actuated, the hydraulic oil flows back and the lift starts lowering.

5.0.3 Electrical System of the Lift X-80 (Pneumatic):

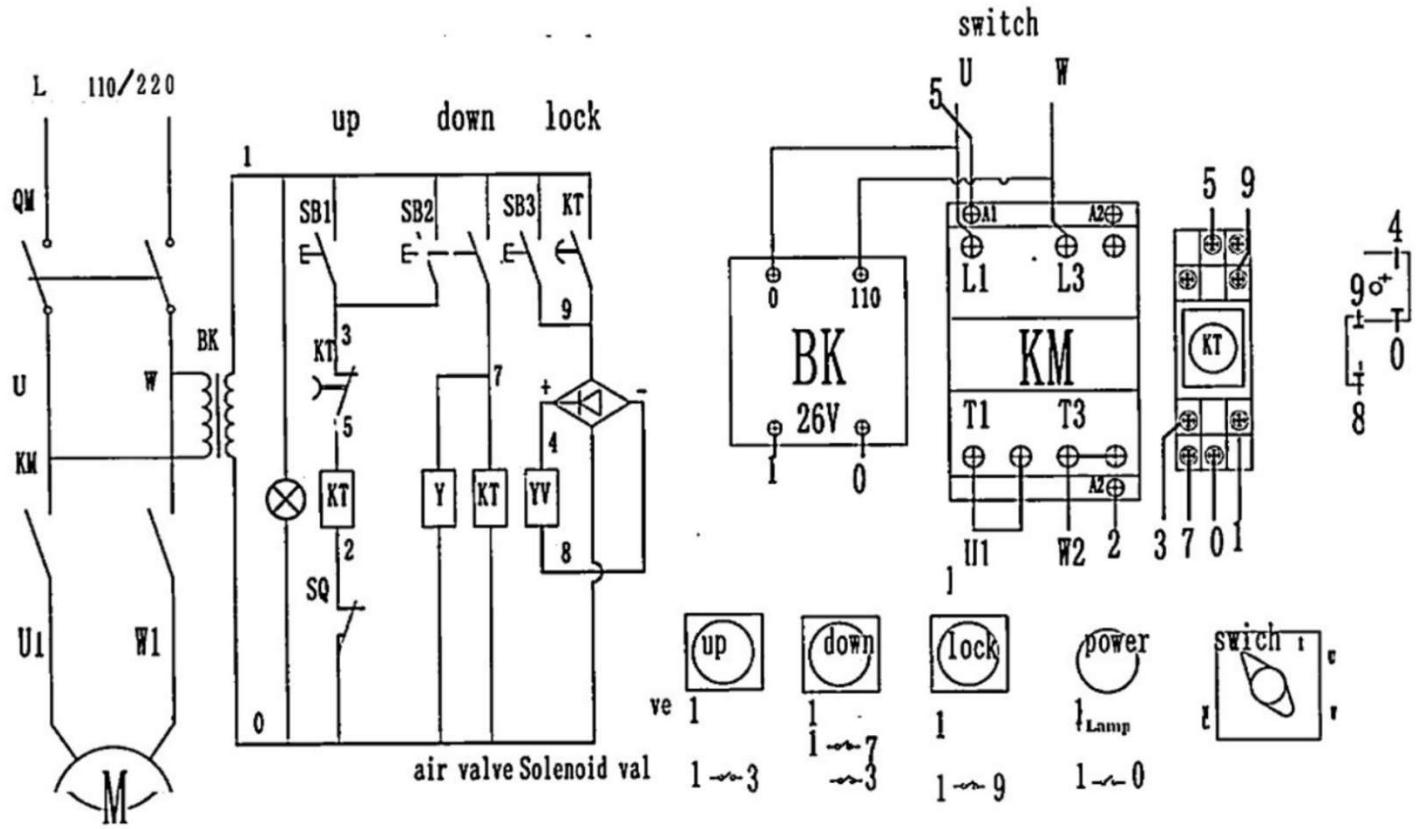

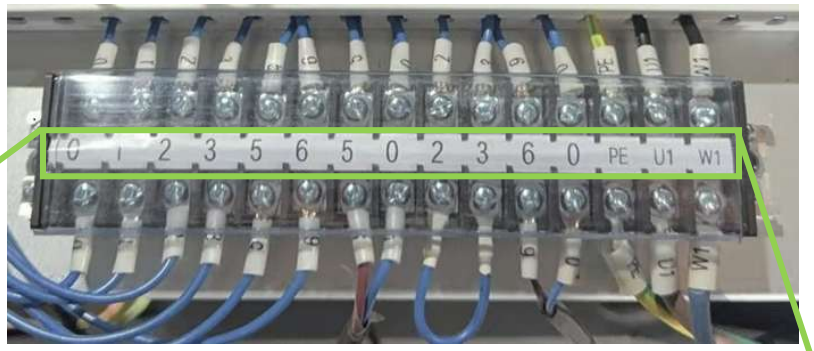

0	1	2	3	5	6	5	0	2	3	6	0	PE	U1	W1

<u>Terminal block wiring diagram</u>

5,0 – Electromagnet,
2,3 – Limit Switch
6,0 – Solenoid Valve
U1, W1 – Motor

Figure 6

5.0.4 The electrical working principle is as follows:

When the UP button is pressed, the contactor (KM) will be powered; motor (M) is energized to drive the gear pump supplying oil to push the platform upward.

When the UP button is released, the contactor (KM) opens, the motor (M) will lose the power, to stop the raising of the platform. If the vehicle is lifted up to the top and contacts the limit switch on base frame, the contactor (KM)) will open, then the motor (M) will lose the power, to stop the platform.

6.0 Frequently Asked Questions (FAQ):

Troubl	Possible Cause:	Solution:
The lift does not work	The main switch is not turned on	Turn the switch on
	There is no power	Check Power on to restore if necessary
	The electrical wires are disconnected	Reconnect
	Fuses are blown	Replace
	The maximum height limit switch is faulty.	Check the switch and relevant connection for proper operation. Replace, if needed.
The lift does not raise	The motor direction of rotation is not correct.	Interchange the two phases on the main switch
	The oil in the hydraulic unit is not sufficient.	Add some hydraulic oil
	Presences of air in the hydraulic circuit	Bleed the hydraulic system
	The UP button is faulty.	Check UP button and connection for proper operation. Replace, if needed
	The maximum pressure valve isfaulty	Check and clean if dirty or replaceif needed
	The lowering solenoid valve does not open.	Check and clean if dirty or replaceif faulty
	The emergency screw of lowering solenoid valve does not close	Retighten the screw
	The pump filter is dirty.	Check and clean if needed.
	The pump suction is blown	Check the seal and replace if needed
The platforms are not leveled	Oil leakages in hydraulic circuit	Check the circuit for any leakage
The lift does not lower when the DOWN button is pressed	The lowering solenoid valve does not work properly	Verify if it is powered and check magneto for damage (replace if disconnected or blown).
	The DOWN button is faulty	Check and replace if needed
	The pressure of compressed air is not suffi cient to clear of the safety lock	Adjust air pressure
The lift does not lift or lower smoothly	Leakages or presences of air into hydraulic circuit	Bleed the hydraulic system
	The pump filter is dirty.	Check and clean if needed.
	The pump suction is blown	Check the seal and replace if needed

7.0 Repair and Maintenance

CAUTION

Before carrying out any maintenance or repair on the lift, disconnect the power supply, and lock out the power switch by installing a padlock to prevent anyone from operating the lift.

Cleaning:

- The lift should be cleaned with dry cloth frequently. Switch off the power before cleaning, to ensure safety.
- The working environment of this unit should be clean.
- Excessive dust in the working environment, will speed up the wear of the parts and shorten the service life of the lift.

Every day:

- If the local voltage fluctuation exceeds 10%, a voltage regulator should be installed.
- Before the operation, carefully check the safety mechanism of the lift to ensure the electromagnet suction and release action is proper, and the safety plate is in good condition.
- When finding any abnormal situation, make sure to repair or replace the failed components immediately.
- Check to see if the rods of the cylinders are clean and inspect for any damage.
- A damaged cylinder rod can result in damaging the seals in the cylinder which can cause leaks in the system resulting in a major malfunction of the lift.
- Check to see if the connection between hydraulic cylinder and platforms shows no damage, and make sure that the connecting nut is not lose or falling.
- Check all the bolts and pins to ensure correct installation.
- Check all the Hydraulic Hose for wear or leaks.
- Check to see if the underside of the platform and other sliding surfaces are properly lubricated. Use high-quality heavy lubrication grease (Lithium based lubrication grease GB7324-87).

⚠ WARNING

Note: The use of water or flammable liquid is strictly forbidden.

Every 3 months	Hydraulic circuit	• check oil tank level; refill with oil, if needed; • check the circuit for oil leakage. • check seals for proper conditions and replace them, if necessary;
	Foundation bolts	• check bolts for proper tightening
	Hydraulic pump	• verify that no noise changes take place in the pump when running and check fixing bolts for proper tightening
	Safety system	• check safety devices for proper operation
Every 6 months	Oil	• check oil for contamination or ageing. Contaminated oil is the main reason for failure of valves and shorter life of gears pumps
Every 12 months	General check	• verify that all components and mechanisms are not damaged
	Electrical system	• a check of the electrical system to verify that motor, limit switch and control panel operate properly must be carried out by skilled electricians
	Oil	• empty the oil tank and change the hydraulic oil

⚠ CAUTION

Note: The underside of each platform and the top side of the chassis should be lubricated with lubricant, to minimize the roller friction and ensure smooth and even lifting.

8.0 Maintenance of Hydraulic System:

- Make sure to change the oil 6-months after initial use of the lift unit. When performing the 6-month service, make sure to clean the hydraulic oil tank.
- When used for the first time or after a long time (more than one month), N32 or N46 anti-wear hydraulic oil should be added before normal operation, and the oil level should be maintained.
- Later clean the hydraulic system once a year, and replace the oil.
- Replace the seal After this unit is put into operation for certain period of time.
- If an oil leakage is found, carefully look for the source of the leak; if the leakage is due to the worn seals, immediately replace the seals.

9.0 Storage and Scrap:

9.0.1 Storage

When the equipment requires long-time storage:

- Lower the platforms down to the floor.
- Disconnect the power supply
- Lubricate all the parts requiring lubrication: mobile contact surface of the platform, etc.
- Empty all the oil/liquid storage units
- Put the plastic cover over the equipment for dust protection.
- Grease all the parts that could be damaged if they dry out.
- To reuse the lift after long term storage, it is necessary to:
  - Put the oil into the reservoir again.
  - Reconnect the lift to the power source.

9.0.2 Scrap

When the equipment service life is expired and can no longer be used, disconnect the power supply, and properly dispose of as per relevant local regulations.

10.0 Lift Set Up Instructions

IMPORTANT NOTICE

These instructions must be followed to ensure proper installation and operation of your lift. Failure to comply with these instructions can result in serious bodily harm and void product warranty. Manufacturer will assume no liability for loss or damage of any kind, expressed or implied resulting from improper installation or use of this product.

PLEASE READ ENTIRE MANUAL PRIOR TO INSTALLATION

Selecting Site Notice

Before installing your new lift, check the following.

1. **LIFT LOCATION**: Always use architects plans when available. Check layout dimension against floor plan requirements making sure that adequate space if available.

2. **OVERHEAD OBSTRUCTIONS**: The area where the lift will be located should be free of overhead obstructions such as heaters, building supports, electrical lines etc.

3. **DEFECTIVE FLOOR**: Visually inspect the site where the lift is to be installed and check for cracked or defective concrete.

CAUTION

4. **OPERATING TEMPERATURE.** Operate lift only between temperatures of 41° -104° F.

5. Lift is designed for **INDOOR INSTALLATION ONLY.** Outdoor use is prohibited.

Floor Requirements

WARNING

This lift must be installed on a solid level concrete floor with no more than 3-degrees of slope. Failure to do so could cause personal injury or death.

DANGER

A level floor is suggested for proper use and installation and level lifting. If a floor is of questionable slope, consider a survey of the site and/or the possibility of pouring a new level concrete slab.

DANGER

- **DO NOT** install or use this lift on any asphalt surface or any surface other than concrete.
- **DO NOT** install or use this lift on expansion seams or on cracked or defective concrete.
- **DO NOT** install or use this lift on a second / elevated floor without first consulting building architect.

CONCRETE SPECIFICATIONS

LIFT MODEL	CONCRETE REQUIREMENTS	
11,000 Lb Models:	5.9" Min. Thickness	3,000 PS
10,000 Lb Models:	5.9" Min. Thickness	3,000 PSI
10.000 Lb Models:	5.9" Min. Thickness	3.000 PSI

DANGER

All models MUST be installed on 3,000 PSI concrete only, conforming to the minimum requirements shown above. New concrete must be adequately cured for 28 days.

When removing the Lift from shipping angles, pay close attention as the Posts can slide and can cause injury. Prior to removing the Bolts, make sure the Posts are held securely by a Forklift, Shop Crane, or some other heavy lifting device.

10.0.1 Mechanical installation

Tools for Installation and Adjustment

To ensure proper installation and adjustment, please prepare the following tools:

Tool	Model
Leveling instrument	Carpentry type
Chalk line	Min 177.17” (4.5m)
Hammer	1.5kg
Medium crescent wrench	1.57” (40mm)
Open-end wrench set	0.43”-0.91” (11mm-23mm)
Ratchet socket set	
Flat Screw driver	5.91” (150mm)
Rotary hammer drill	0.75” (19mm)
Concrete drill-bit	¢0. 75” (19mm)

Tape Measure（7.5m）

Hammer

LevelBar

English Spanner(12")

Wrenchset：(12″、13″、14″、15″、17″、19#
24″、30#)

Carpenter’s Chalk

ScrewSets

Pliers

LockWrench

socket Head Wrench：(3″、5″、6″、8″)

Unpacking

- Remove the packing materials and inspect the lift for any sign of shipment damage. Check the packing list to see if the main parts and accessories are complete.
- Keep the packing materials away from the children to avoid injury; dispose off any packing materials in a safe and proper manner.
- Layout everything on the floor and inspect everything.

The packing of the lift is delivered in following components:

(1) Base units packed in a plywood box, including N. 8rubber pads. - 1179LBS (535KG).

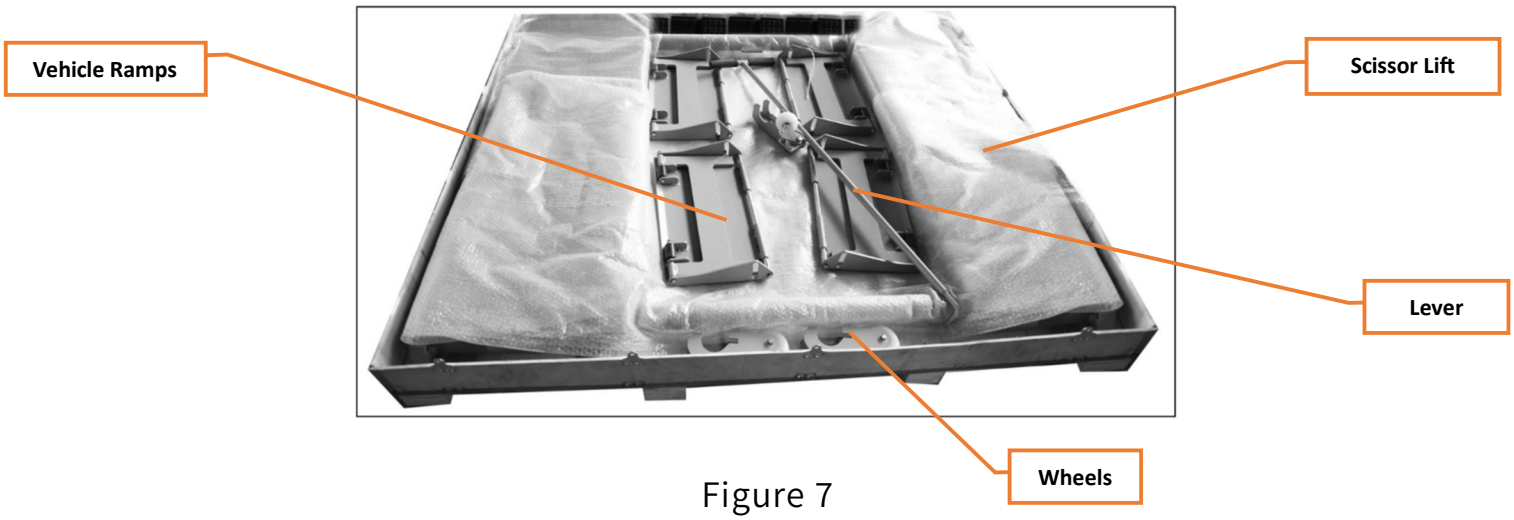

Figure 7

(2) Portable power unit comes in a plywood box. - 110 LBS (50KG).

Figure 8

Important notice: ⚠ CAUTION

- Incorrect installation of the lift system can cause damage to the lift or personal injury.
- The manufacturer will not take any responsibilities for any damage caused due to incorrect installation and usage of this equipment, directly or indirectly.
- The correct installation location shall be flat horizontal floor to ensure a proper horizontal lift.
- The level of the lift relies on the level of the floor where it is placed.
- Do not install the lift on a grade that has a giant slope.

Installation site: ⚠ CAUTION

Select installation site based on the following conditions:

- Lift can only be placed on concrete slab, which must have a minimum thickness of 5.9” (150mm) with a 3000 PSI rating or more and should be aged at least 7 days.
- Don’t install the lift on any asphalt surface or any surface other than concrete.
- The concrete slab must be level.

Maximum machine space requirements are 3200X2000mm with a minimum distance from walls as shown in the diagram.

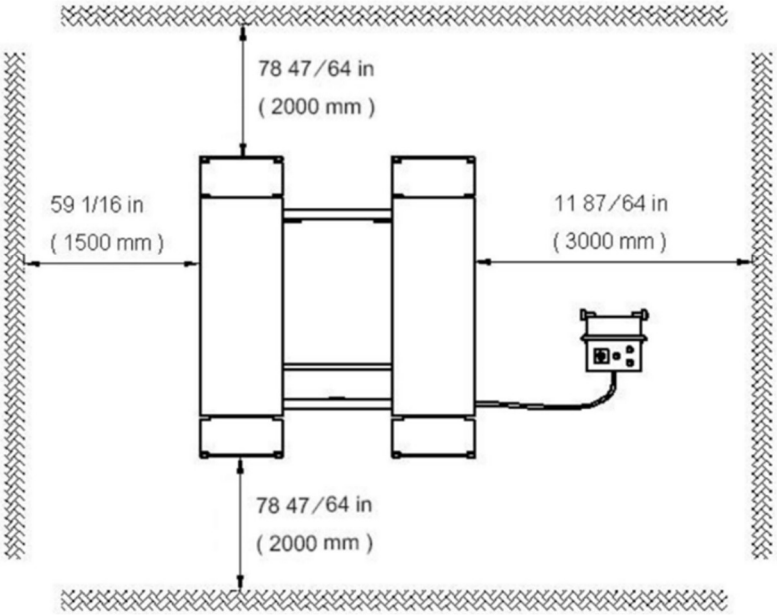

- Check for possible obstruction, e.g. low ceiling height, wireways, conduits, overhead pipeline, walkways, exits, etc.
- The front and back of the lift should be reserved with sufficient space to accommodate all the vehicles.
- Adequate space around the lift should be provided based on local fire and evacuation safety code.
- Don't locate the lift on the concrete with seams or cracks and defects.

⚠ CAUTION

- **Overhead obstruction:** The lift installation area can't have any overhead obstruction, such as HVAC system, building support, electrical pipe, utility lines/conduits etc.
- When selecting the location for the lift make sure there is enough ceiling clearance.
- Power supply: Make sure to get a dedicated power line installed by a certified electrician.

Power Unit and Hydraulic/Pneumatic/Limit switch line Installation for X85 (pneumatic version):

1) Locate the pump control panel in the desired location.
2) Install caster kits to move the lift in the desired location.
   - Raise the lift a minimum of 12".

- Install the center caster.

- Install the left-side caster.

- Install the right-side caster.

- Lower the lift down until the base lifts up in the air and is supported by the 3 casters.

- Install the lever and move the lift to the desired location.

- Once in the desired location raise the lift a minimum of 12” again and remove the casters.

3) Pull out the Hydraulic/Pneumatic/Limit switch connection assembly.

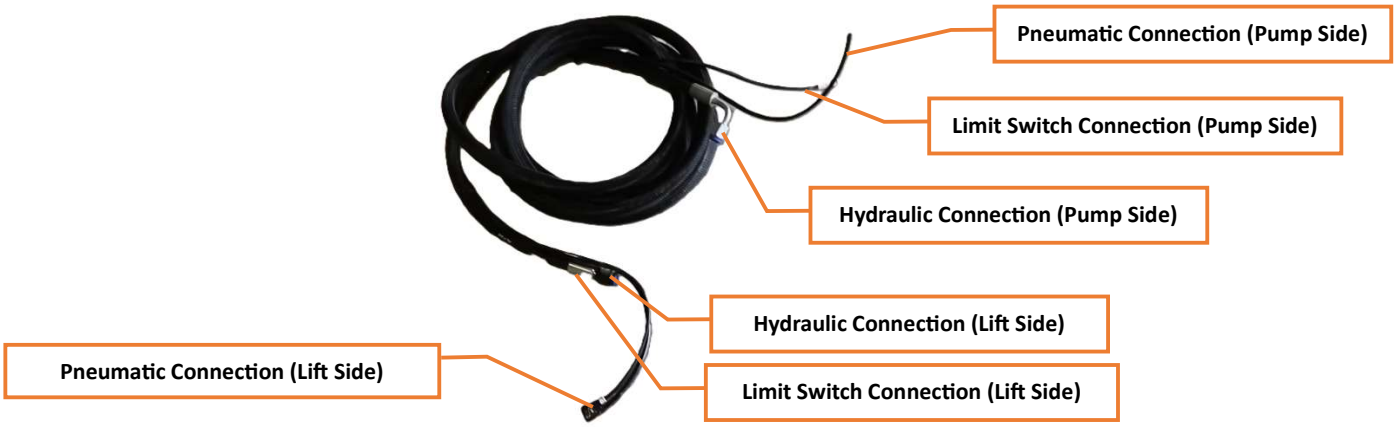

4) Make the Hydraulic/Pneumatic/Limit switch connection by the scissor lift as shown below and tighten all the fittings to prevent oil leakage.

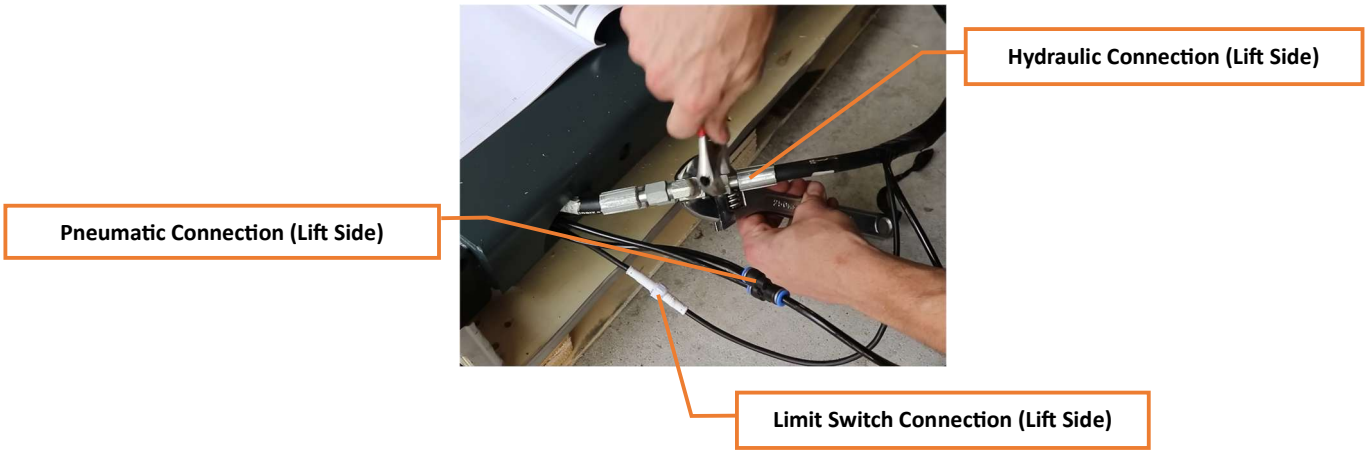

⚠ CAUTION

5) Connect the Hydraulic/Pneumatic/Limit switch connection to the pump as shown below and tighten all the fittings to prevent oil leakage.

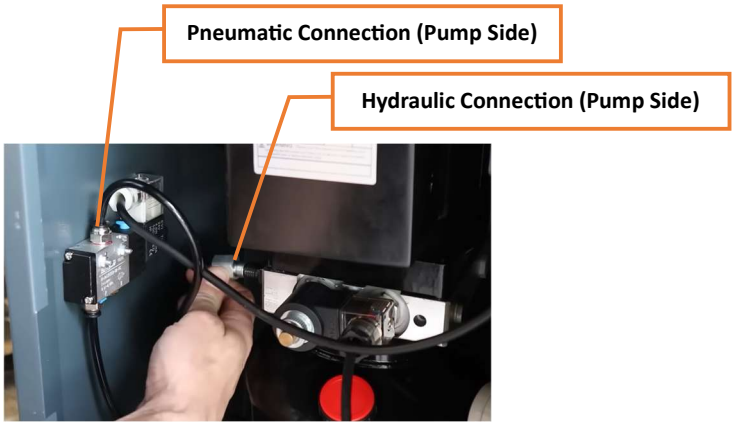

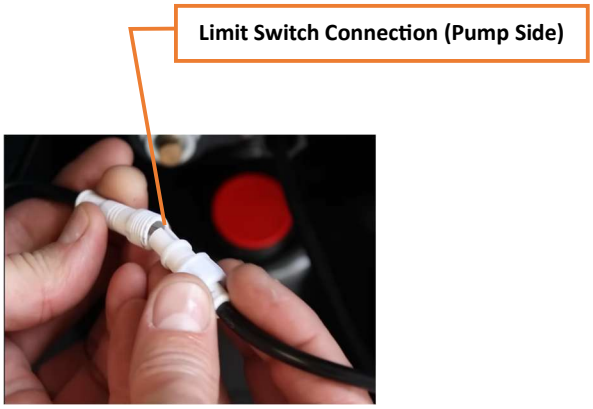

⚠ CAUTION

Note:

- ***Clean the impurities in the hydraulic line and remove the protective plug from the hydraulic cylinder.***
- ***When the hydraulic hose installation needs to go through the column, ensure the hydraulic hose won't touch any movable parts inside the column***

6) Fill the reservoir with hydraulic oil N32 or N46 (oil capacity of 10L) to the oil reservoir of the power unit up to Max Fill Mark on the oil level dip stick. Fill the reservoir carefully to avoid dust and other pollutants to mix with the hydraulic oil.

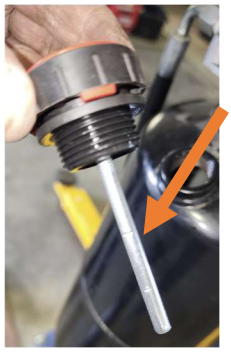

Figure 9: Hydraulic Reservoir Fill Port and Fill Level Mark

10.0.2 Electrical Installation:

The lifts are offered in two electrical configurations:

- 110VAC/60HZ/1PH
- 220VAC/60HZ/1PH

Locate the serial number plate on power side post as shown below or the pump serial number plate to locate the voltage required for the equipment as shown below. Make sure to hire a professional electrician to connect the power to the junction box on the pump.

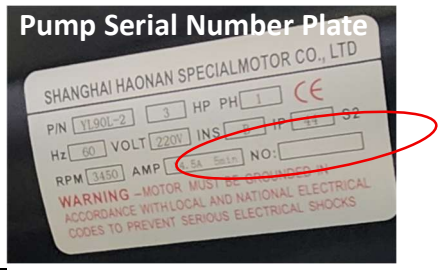

Wire Color Coding

Brown = Hot Leg

Blue = Neutral (may also serve as a 2nd hot leg in 220V setting)

Green/Yellow = Ground

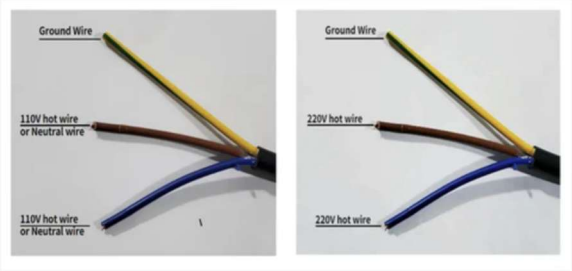

Figure 10

Electrical Installation for Lock Button:

Locate wire from the LOCK button on the control panel

Locate the LOCK button wire coming out of the scissor lift.

Connect the LOCK button wire from control panel to the mating connection coming out of the scissor lift.

10.0.3 Lift Lubrication:

- Lubricate all contact sliding pillow blocks and pivot blocks by pumping general-purpose lithium grease through the grease fittings shown below. All sliding surfaces should also be coated evenly by general-purpose lithium grease.

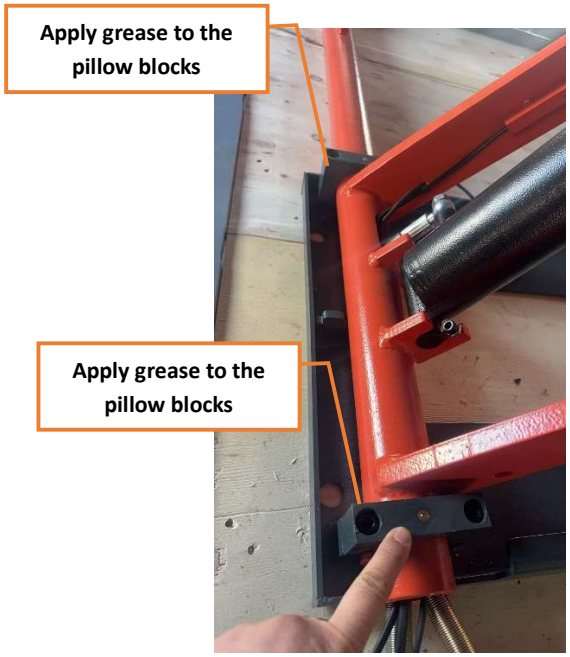

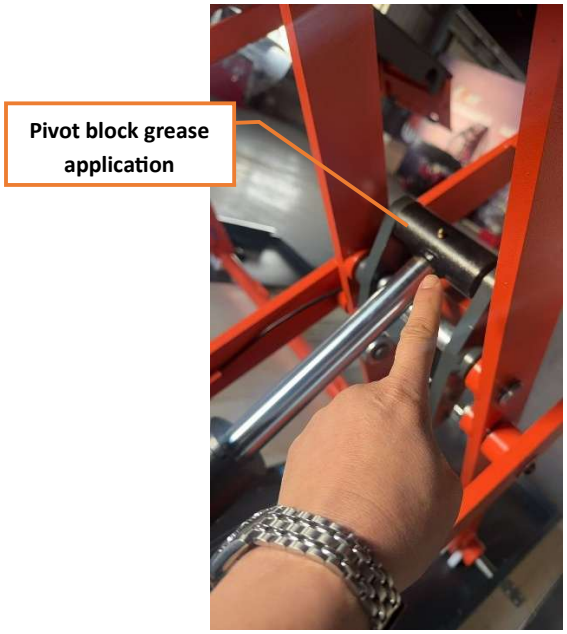

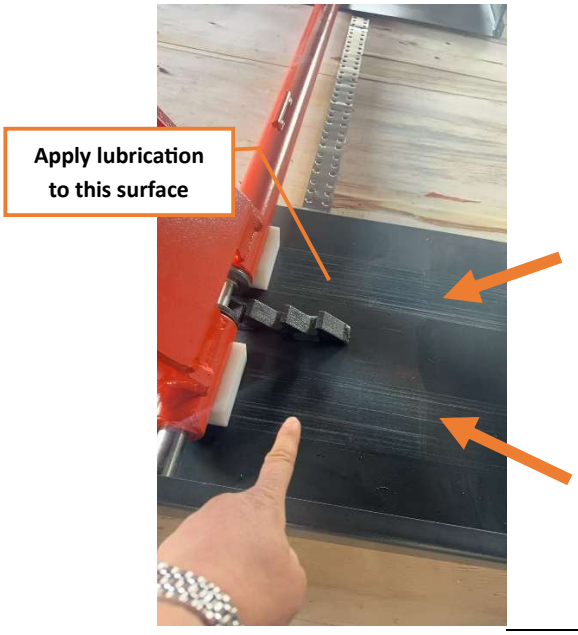

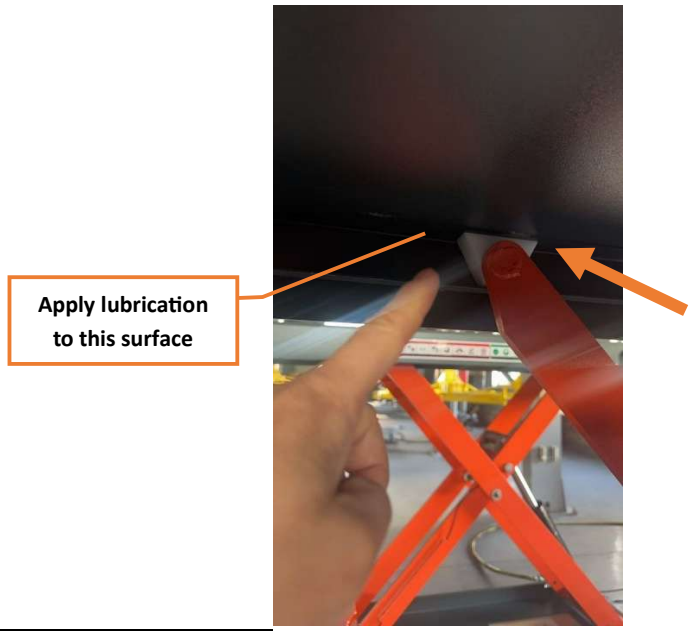

10.0.4 Bleeding the scissor lift

Safety First

- ***Make sure the lift is empty (no vehicle on it).***
- ***Do not put your hands or body under the platform while performing this procedure.***

🔧 **Steps to Bleed a Scissor Lift**

1) Raise and Lower the Lift Repeatedly
    - ***Raise the lift at least 12".***
    - ***Place some heavy objects on the platform***

      ⚠ CAUTION
    - ***The Platform will not lower down without any load on the platform.***
    - Fully raise the lift using the power unit.
    - Let it go as high as it can (safely), and slowly lower it back down to **12" above ground**.
    - Repeat this process 3 times.
    - This motion allows trapped air to move toward the hydraulic reservoir.
2) Check Hydraulic Fluid Level
    - After cycling, lower the lift completely.
    - Open the power unit reservoir and check fluid level.
    - Top it off with the correct hydraulic fluid (usually AW32 or ISO 32 unless specified otherwise).
    - Be sure not to overfill — keep it just below the fill hole.
3) Inspect for Leaks or Air Ingress
    - Make sure all connections are tight.
    - If air continues to enter the system, check for damaged seals, hoses, or fittings.
4) Signs the system is properly bled
    - The lift raises evenly.
    - No jerky or slow movements.
    - No unusual noises (e.g., gurgling).
    - No noticeable drop or sag when stopped.

11.0 SAFETY INSTRUCTIONS

Contact with line power voltages can cause death or serious injury.

- **Do not operate equipment with a damaged power cord.**
- **If an extension cord is necessary, a cord with a current rating equal to or greater than that of the equipment should be used.**
- **Do not expose the equipment to rain or wet environment.**
- **Make sure to connect the unit with proper electrical power.**
- **Use a certified electrician to connect the electrical power.**
- **Do not remove or bypass grounding pin.**
- **Only qualified service personnel should service this equipment.**
- **Disconnect power to the unit before servicing.**

Contact with moving parts could cause injury.

- **Keep hands and other body parts away from moving surfaces.**
- **Do not bypass any safety features.**
- **During the lifting and lowering of the lifting platform, stay clear of the moving parts of the lift. The operator needs to confirm that there is no one in the hazardous area before the lifting operation.**
- **When the height of the lifting platform is less than 1.75 meters; relevant personnel should avoid hitting their heads when entering the platform.**
- **An improper docking of the vehicle on the lifting platform, improperly parking the vehicle, or an oversized vehicle that does not match the lift specifications can cause the vehicle to fall at risk.**
- **It is not allowed to stand or sit on the lift platform during lifting operation.**

Debris, dirt, and fluids can cause serious eye injury.

- **Wear approved safety glasses during mount and demount procedures.**
- **Lubricating oil around the lift can cause slip risks. The area around the lift, below and on the top of the platform must be kept clean. Make sure to clean up the oil spills promptly.**

Tools that break or slip can cause injury.

- **Read and understand the operation instructions before using the equipment.**
- **Frequently inspect, clean, and lubricate (if recommended) where designated.**

12.0 Exploded Assembly View and Bill of Material:

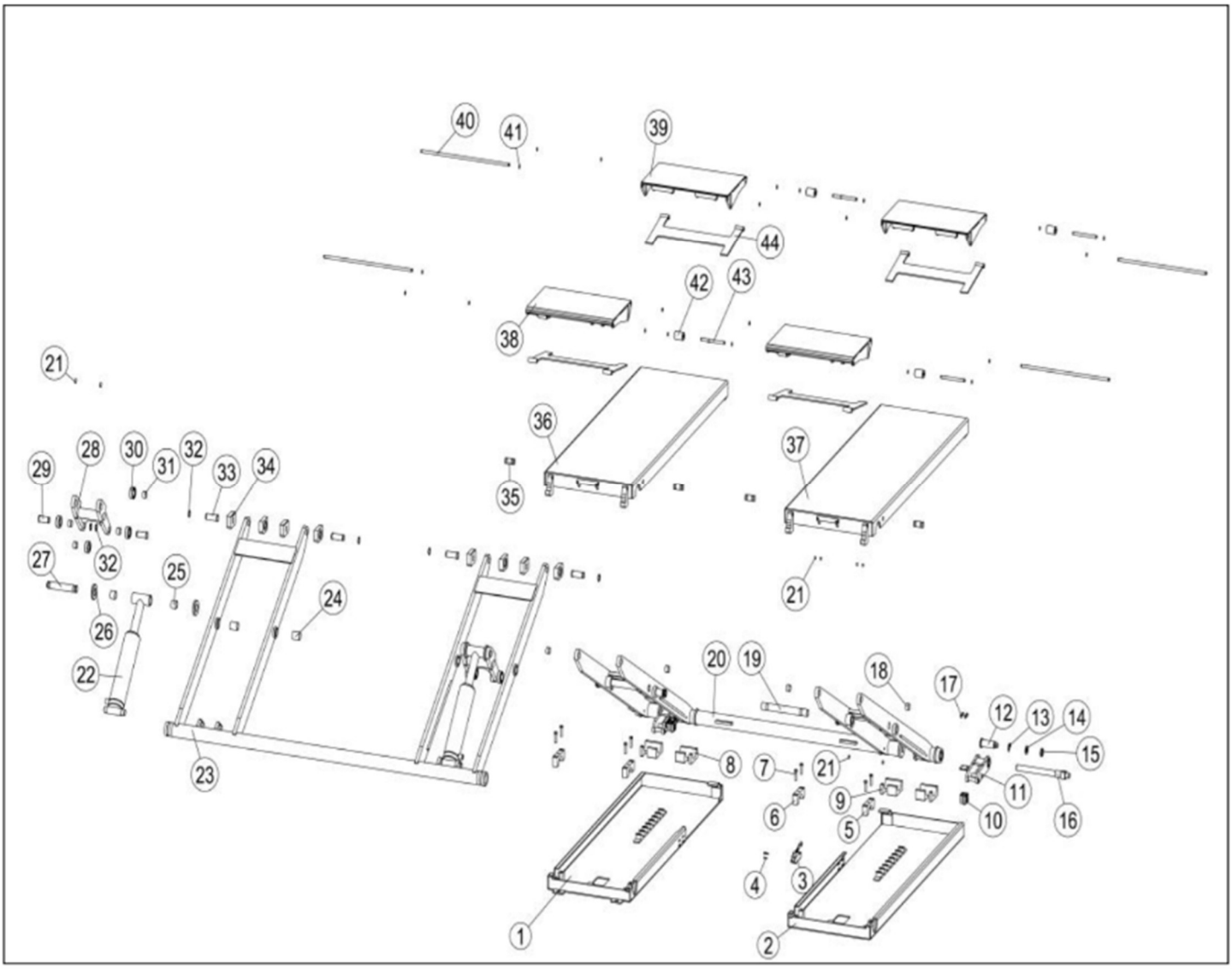

Nos.	Part Nos.	Name	Quantity
1	YL-ZWXJ-01-01-00A	Left base welding	1
2	YL-ZWXJ-01-01-00B	Right base welding	1
3	8108	Limit switch	1
4	RH000510	Snap-head bolt M5X10	4
5	YL-ZWXJ-00-01	Top tile seat (without platform)	2
6	YL-ZWXJ-00-02	Top tile seat (with platform)	2
7	IH001045	inside hexagonal bolt M10X45	8
8	YL-ZWXJ-00-03	Bottom slide block(left)	2
9	YL-ZWXJ-00-04	Bottom slide block(right)	2
10	SDA-20*15 M5	Thin cylinder	2
11	YL-ZWXJ-06-00	Lock frame	2
12	YL-ZWXJ-00-05	Middle axle	4
13	YL-ZWXJ-00-06	Flower mat	4
14	W002000	Φ20 flat washer	4
15	YL-ZWXJ-00-07	Round nut M20	4
16	YL-ZWXJ-00-08	Fixed shaft for lock frame	2
17	RH000512	Snap-head bolt M5X12	8
18	SF-2530	Oilless bearing	4
19	YL-ZWXJ-00-09	Fixed shaft for power arm	2
20	YL-ZWXJ-03-00	Internal arm welding	1
21	ST000810	Jackscrew M8X10	16
22		Oil cylinder	2
23	YL-ZWXJ-02-00	Outside arm welding	1
24	SF-3025	Oilless bearing	4
25	SF-3050	Oilless bearing	4
26	YL-ZWXJ-00-10	Oil cylinder casing	4
27	YL-ZWXJ-00-11	Fixed shaft on cylinder	2
28	YL-ZWXJ-04-00	Power arm welding	2
29	YL-ZWXJ-00-12	The fixed axis for power arm walking wheel	4
30	YL-ZWXJ-00-13	Power arm walking wheel	8
31	SF-2515	Oilless bearing	8
32	RE002500	Φ25 clamp spring	14
33	YL-ZWXJ-00-14	Upper cover slide shaft	4
34	YL-ZWXJ-00-15	Upper cover slider	4
35	YL-ZWXJ-00-16	Top cover fixed shaft	4
36	YL-ZWXJ-05-01-00A	top left cover plate welding	1
37	YL-ZWXJ-05-01-00B	top right cover plate welding	1
38	YL-ZWXJ-07-01-00A	Left mounting plate welding	2
39	YL-ZWXJ-07-01-00B	Right mounting plate welding	2
40	YL-ZWXJ-00-17	Mounting plate fixed shaft	4
41	RE001200	Φ12 clamp spring	30
42	YL-ZWXJ-00-18	Mounting plate walking wheel	8
43	YL-ZWXJ-00-19	Mounting plate walking axle	8
44	YL-ZWXJ-00-20-00	Mounting plate bracket welding	4

Sales & Support: (888) 636-1918; Email: info@autokato.com Released 1/13/2026

13.0 Sales and Tech Support Contact info

Contact Info

Main Phone Number: (888) 636-1918

Sales: Ext. 101

sales@autokato.com

Tech Support: Ext. 102

(please follow voicemail prompts for fastest assistance or fill out our technical support form here)

technical.support@autokato.com

Commercial Accounts: Ext. 103

info@autokato.com

Amazon, eBay and Temu Purchase Inquiries:

Please send us a message directly on the platform where you made your original purchase.